PD40 and PD400F-CU Pad-Style Snow Guard
Submittal Document Set

ROOF TYPES

- New Composition (Asphalt) Shingle
- New Synthetic Shake or Slate (For synthetic materials < = 3/8” thickness)

AVAILABLE MATERIALS

- Aluminum (AL)
- Copper (CU)
- FreedomGray™ (FG)
- Lead Coated Copper (LC)
- Rheinzink® (ZN)

AVAILABLE FINISHES

- Pre-Painted Kynar® Stock Colors

FEATURES/ADVANTAGES

- Pad area is 2 3/8" L x 2 3/8" W (at widest point) x 1 7/16" H
- Strap length is 6 ½" L
- Our riveted "fish head" design means optimum strength with no risk of unfolding
- Can be mechanically attached through synthetic slate
- Correct size for most composition shingle applications
- Allows snow and ice to drop off in small amounts or melt completely
- Protects against snow damage at the lower roof level (gutters, valleys, crickets, roof protrusions, plumbing vents, etc) and at ground level (cars, people, landscaping, pets, walkways, ground-mounted mechanical units)
- Also available with Fleur-de-lis embellishment (SKU: PD400F-CU, Copper only)







Cut Sheet - PD40

1. Installation to be completed in accordance with manufacturer's written specifications and installation instructions.
2. See spec sheet or contact manufacturer for detailed material, finishes, and configuration options.
3. Contact manufacturer for detailed layout.
4. Do not scale drawings.
5. Subject to change without notice.
6. For patent information, visit our Patent Page.

Available Materials

- ☐ Aluminum
- ☐ Copper
- ☐ Freedom Gray™
- ☐ Lead-Coated Copper
- ☐ Rheinzink®

*Some materials may have a 3rd button connecting cap and gusset to strap

Available Finishes

- ☐ Mill Finish (Standard)
- ☐ Pre-Painted Aluminum
  (Firestone UnaClad Kynar Color:_____)
- ☐ Powder Coated
  (Tiger Drylac RAL#_____)

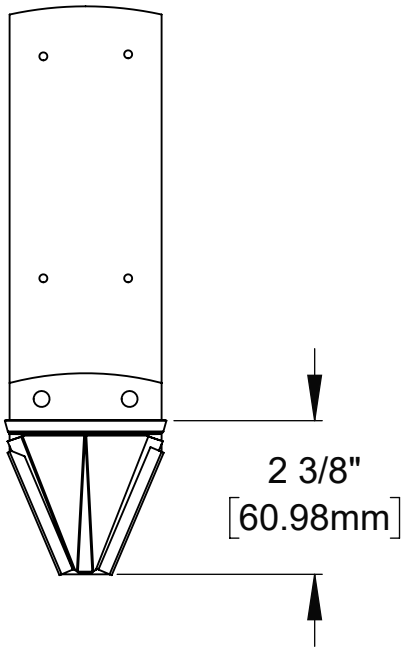

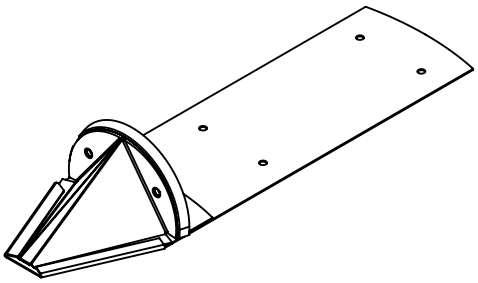

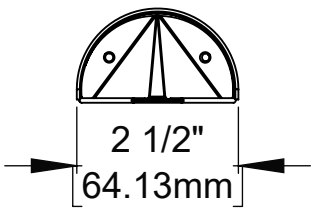

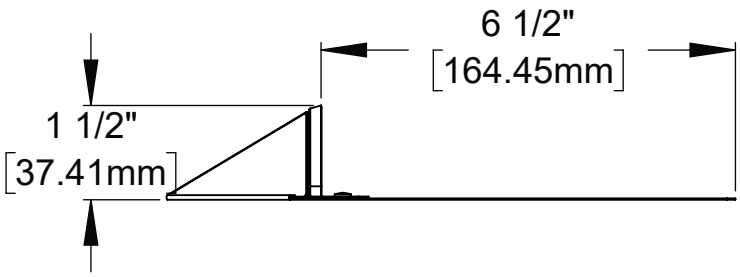

ALPINE SNOWGUARDS®

289 Harrel Street
Morrisville, VT 05661
Phone: 1.888.766.4273
Fax: 1.888.766.9994
Email: Info@alpinesnowguards.com

Scale: 1:3 | 4/14/2023

Cut Sheet - PD400F-CU

1. Installation to be completed in accordance with manufacturer's written specifications and installation instructions.
2. See spec sheet or contact manufacturer for detailed material, finishes, and configuration options.
3. Contact manufacturer for detailed layout.
4. Do not scale drawings.
5. Subject to change without notice.
6. For patent information, visit our Patent Page.

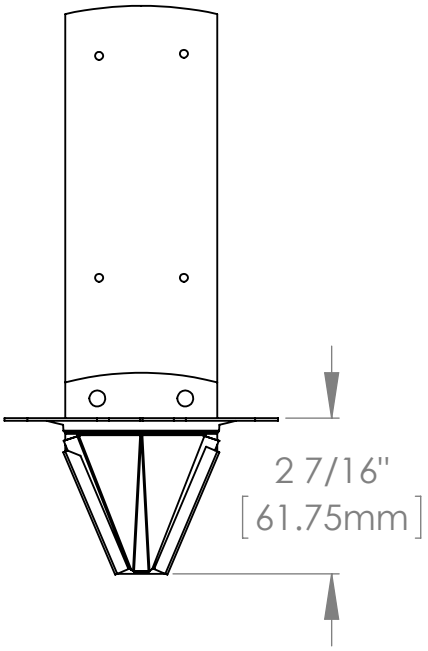

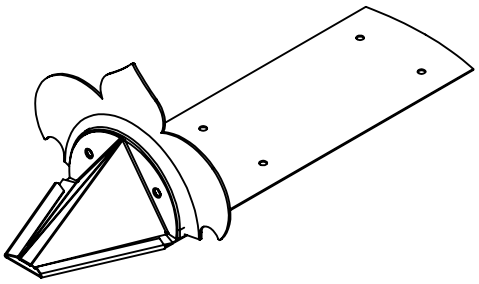

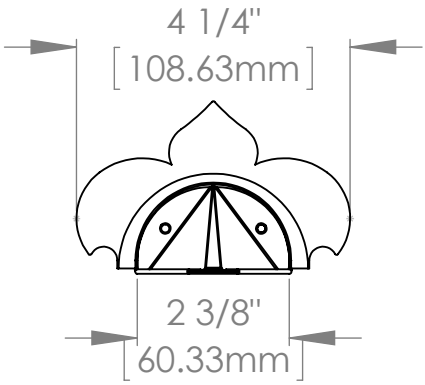

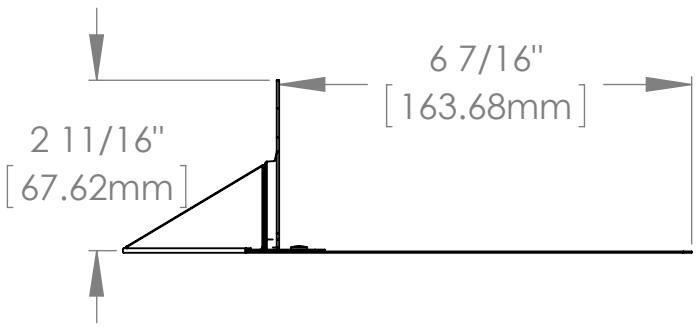

ALPINE SNOWGUARDS®

289 Harrel Street
Morrisville, VT 05661
Phone: 1.888.766.4273
Fax: 1.888.766.9994
Email: Info@alpinesnowguards.com

Scale: 1:3 | 10/27/2020

PD40, PD40R, PD400F-CU and PD400FR-CU Specification Sheet
Snow Guards

Part 1 – GENERAL

1.1 SUMMARY

A. WORK INCLUDES

1. PD40, PD40R, PD400F-CU and PD400FR-CU gusseted snow guards attach directly to roof deck.
2. Coordinate with roof installation to assure proper placement of snow guards.
3. Provide appropriate snow guard and fasteners for roof system.

B. RELATED SECTIONS

1. Section 076000: Flashing and Sheet Metal	MasterFormat 2016 07 60 00
2. Section 073100: Shingles and Shakes	MasterFormat 2016 07 31 00
3. Section 073200: Roof Tiles	MasterFormat 2016 07 32 00
4. Section 077253: Snow Guards	MasterFormat 2016 07 72 53

1.2 SYSTEM DESCRIPTION

A. COMPONENTS

1. PD40 and PD400F-CU snow guard system consists of individual metal snow guards.
2. PD40R and PD400FR-CU snow guard systems consist of individual snow guard with metal sleeve.
3. Fasteners
    a. To be of metal compatible with snow guards.
    b. Fasteners should be selected for compatibility roof deck.
    c. Fastener strength should exceed or be equal to snow guard system.

B. DESIGN REQUIREMENTS

1. Spacing to be recommended by manufacturer or building engineer.
2. Minimum 2 fasteners per snow guard.
3. It is important to design new structures or assess existing structures to make sure they can withstand retained snow loads.

1.3 SUBMITTAL

A. Submit manufacturer's specifications, standard detail drawings, installation instructions, and recommended layout.

1.4 QUALITY ASSURANCE

A. Installer to be experienced in installation of specified roofing material and snow guards for not less than 5 years in the area of the project.

1.5 DELIVERY / STORAGE / HANDLING

A. Inspect material upon delivery and order replacements for any missing or defective items. Keep material dry, covered and off the ground until installed.

PD40, PD40R, PD400F-CU and PD400FR-CU Specification Sheet
Snow Guards

Part 2 – PRODUCTS

2.1 MANUFACTURER

A. Alpine SnowGuards®, a Division of Vermont Slate & Copper Services, Inc.
289 Harrel St., Morrisville, VT 05661 | 888-766-4273 | www.alpinesnowguards.com

2.2 MATERIALS

A. Copper – Strap, cap and gusset are 16 oz copper. Fleur-de-lis embellishment is *only* available in copper and has a minimum material thickness of .040.
B. Lead-Coated Copper – 16 oz lead-coated copper.
C. Aluminum – .032 aluminum.
D. Freedom Gray™ – 16 oz tin-zinc coated copper.
E. Rheinzink® – .8mm Rheinzink®.

2.3 FINISH (choose one)

A. Mill Finish – standard.
B. Powder Coated – available at additional cost.
(Not available for PD400F-CU or PD400FR-CU)
C. Kynar 500® pre-painted coil – aluminum only.
(Not available for PD400F-CU or PD400FR-CU)

Part 3 – EXECUTION

3.1 EXAMINATION

A. SUBSTRATE

1. Inspect structure on which snow guard system is to be installed and verify it will withstand any additional loading it may incur. Notify general contractor of any deficiencies before installing Alpine SnowGuards' products.
2. Verify roofing material has been installed correctly prior to installing snow guards.

3.2 INSTALLATION

A. Comply with architectural drawings and snow guard manufacturer's recommendations for location of system. Comply with manufacturer's written installation instructions for installation and layout.

Document Version 04.26.23
07 72 53 Snow Guards

PD40 and PD400F-CU Snow Guard Installation Instructions

ROOF TYPES

- New Composition (Asphalt) Shingle
- New Synthetic Shake or Slate (For synthetic materials < = 3/8” thickness)

INSTALLATION

1. Install the first 2 rows of roofing material.

2. Place snow guard low enough on roofing materials to leave a minimum gap of 5/8”, or at least 3 times the thickness of the roofing materials, whichever is greater *(fig. 1).*

3. Above the nail line, attach the snow guard. Use a minimum of 2 fasteners of a material compatible with snow guard and roof system.

FIG. 1

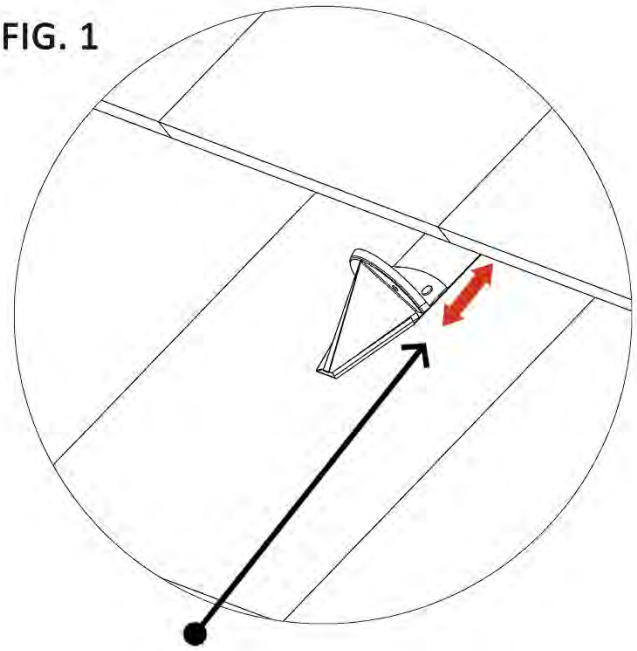

PROPER SNOW GUARD PLACEMENT

Ex. 0.5” shingle thickness X 3 = 1.5” spacing

Back of head is 1.5” from front edge of shingle

PD40 and PD400F-CU Snow Guard Installation Instructions

STANDARD SNOW GUARD LAYOUT OPTIONS

IMPORTANT: All layouts begin with a 3-row pattern. Estimated quantities provided include 3-row pattern. If you have any questions, please contact us at 888-766-4273.

Please use the guidelines below to determine the appropriate layout for your installation.

PROJECT DETAILS				LAYOUT DETAILS		
Roof Type	Rafter Length	Ground Snow Load (PSF)	Roof Pitch	Layout	Est. Snow Guard QTY.	Spacing
Comp. Shingle	Any	60 psf or Less	6/12 or Less	3-Row Pattern	17 per 10' of Eave	3 rows, 24" on center horizontally with middle row staggered 12". Rows vertically spaced every other course.
	15' or Less	60 psf or Less	7/12 to 16/12			
Synthetic Slate	15' or Less	60 psf or Less	16/12 or Less			
Comp. Shingle or Synthetic Slate	15' or greater	60 psf or Less	16/12 or Less	2 x 4 Pattern	12 per roofing square	Space rows 2' vertically and 4' horizontally to within 10' of the ridge.
	Any	61 - 90 psf	16/12 or Less	2 x 3 Pattern	18 per roofing square	Space rows 2' vertically and 3' horizontally to within 10' of the ridge.
	Any	91 - 120 psf	16/12 or Less	2 x 2 Pattern	24 per roofing square	Space rows 2' vertically and 2' horizontally to within 10' of the ridge.

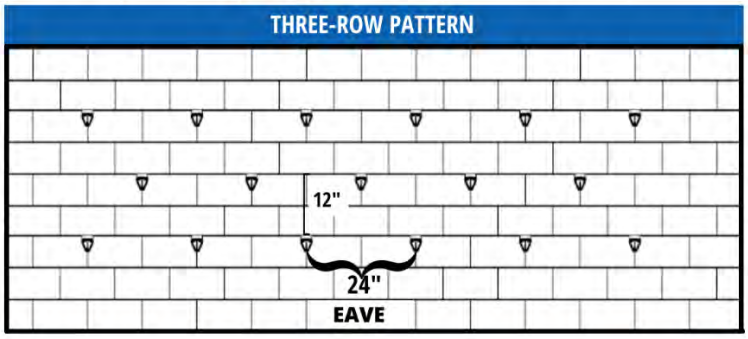

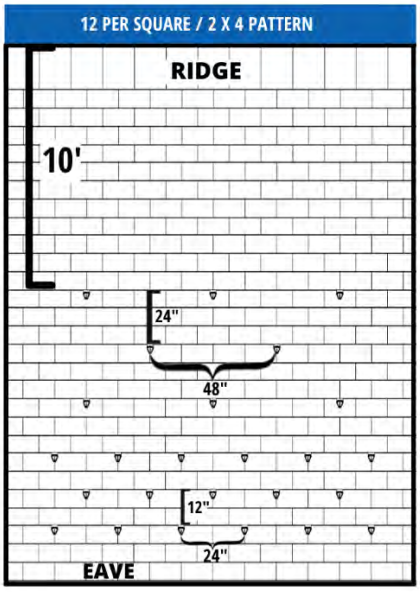

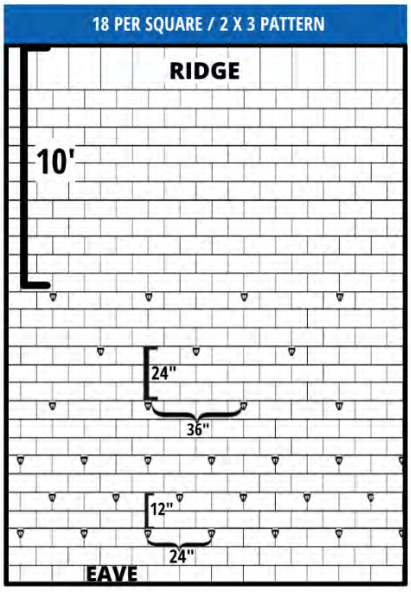

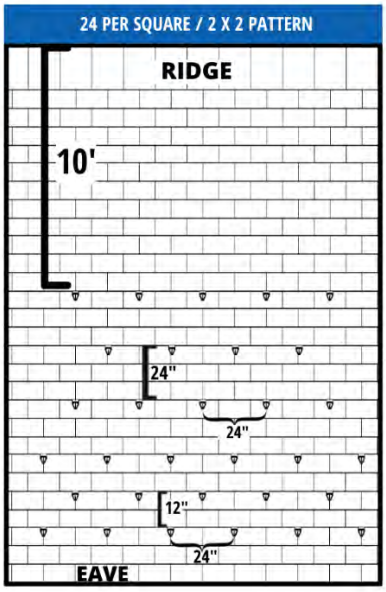

Document Version 03.14.2023
07 72 53 Snow Guards

Snow Guard Maintenance

Our snow guards must be inspected annually. Any defects or damage in materials and/or workmanship must be reported to Alpine SnowGuards immediately. Seller will not be responsible for snow guard systems that have not been properly maintained.

- Ensure snow guard brackets, accessories & components are intact, have not been displaced, and show no signs of damage or wear.
- Inspect fasteners into roof deck.
- Inspect snow guard-related waterproofing and replace or repair where necessary to ensure roof integrity.
- Snow accumulation on roofs and rooftop solar panels must be removed to avoid damage to the roof or panels, the building structure, and anything below. Heavy snowfalls, drifting, and the gradual accumulation of snow and ice can lead to less-than-ideal snow guard performance.
- Check each clamp set screw with a torque wrench to ensure proper fastening has been maintained (clamp-to-seam models).
- Inspect sealant, tape, and adhesive. Remove and replace as needed.

Alpine SnowGuards®, a Division of Vermont Slate & Copper Services, Inc.
289 Harrel St., Morrisville, VT 05661 | 888-766-4273 | info@alpinesnowguards.com | www.alpinesnowguards.com

UNA-CLAD™ METAL - Pre-Painted Kynar® Stock Colors

For Half-Round Pad Style Snow Guards and SnowMax Color Insert Strips

Double-Sided Stock Colors

Colonial Red (51)

Classic Copper (75)

Charcoal Gray (05)

Slate Gray (03)

Matte Black (69)

Medium Bronze (66)

Mansard Brown (81)

Dark Bronze (57)

Hartford Green (33)

Single-Sided Stock Colors

Terra Cotta (54)

Patina Green (39)

Teal (21)

Brandywine (45)





Other Pad Style Material Options:

Aluminum (AL) Copper (CU) Freedom Gray™ (FG) Lead-Coated Copper (LC) Rheinzink® (ZN)

Mill Finish aluminum pad-style snow guards can also be powder coated with **RAL TIGER Drylac® Exterior Powder Coatings** for an additional charge.