PD82-AL Clamp-to-Seam Pad-Style Snow Guard
Submittal Document Set

ROOF TYPES
STANDING SEAM
- Single Lock Panels
- Snap Lock Panels
- Double Lock Panels

AVAILABLE MATERIALS
- Aluminum 6000 Series (AL)

AVAILABLE FINISHES
- Mill Finish
- RAL TIGER Drylac® powder coating options (additional charge)

FEATURES/ADVANTAGES
- Unique "Saddle" design holds back snow and ice while allowing melt-off and rain to flow through
- For use on metal roofs with vertical standing seam / double lock panels
- Ease of installation - no on-site assembly required
- Extruded shape maintains cost-effectiveness with the efficiency of our other Clamp-to-Seam style snow guards
- Protects against snow damage at the lower roof level (gutters, valleys, crickets, roof protrusions, plumbing vents, etc) and at ground level (cars, people, landscaping, pets, walkways, ground-mounted mechanical units)

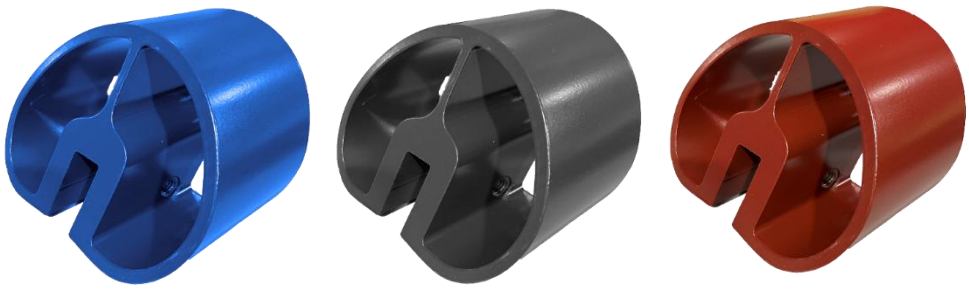

PD82 SEAM CONFIGURATIONS

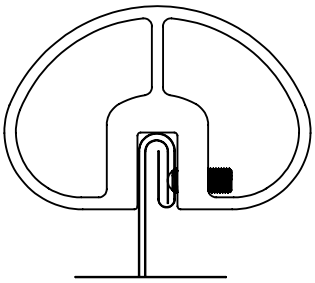

PD82-AL
Double Lock

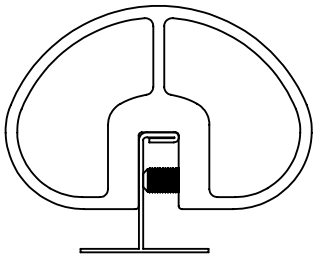

PD82-AL
Single Lock: less than 5/8"

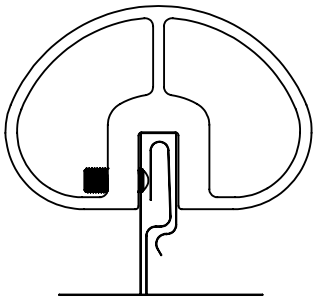

PD82-AL
Snap Lock: less than 1/2"

Measurements in Diagram Descriptions = Seam Width

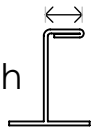

ALPINE SNOWGUARDS®

289 Harrel Street
Morrisville, VT 05661
Phone: 1.888.766.4273
Fax: 1.888.766.9994
Email: Info@alpinesnowguards.com

Scale: 1:3 | 6/2/2026

Cut Sheet - PD82-AL

1. Installation to be completed in accordance with manufacturer's written specifications and installation instructions.
2. See spec sheet or contact manufacturer for detailed material, finishes, and configuration options.
3. Contact manufacturer for detailed layout.
4. Do not scale drawings.
5. Subject to change without notice.
6. For patent information, visit our Patent Page.

I have verified that this clamp/bracket will fit the seam for this project.

Quote #:_____

Signature:_____Date:_____

To confirm order, return signed cut sheet and sales quote.

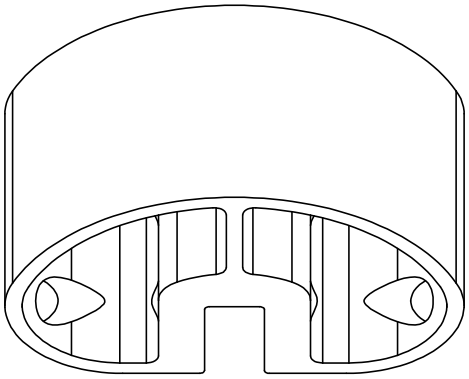

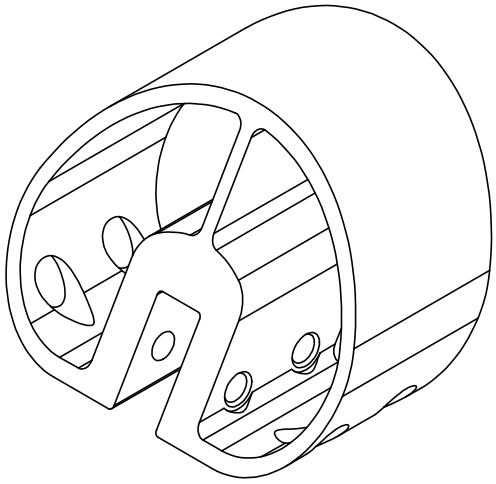

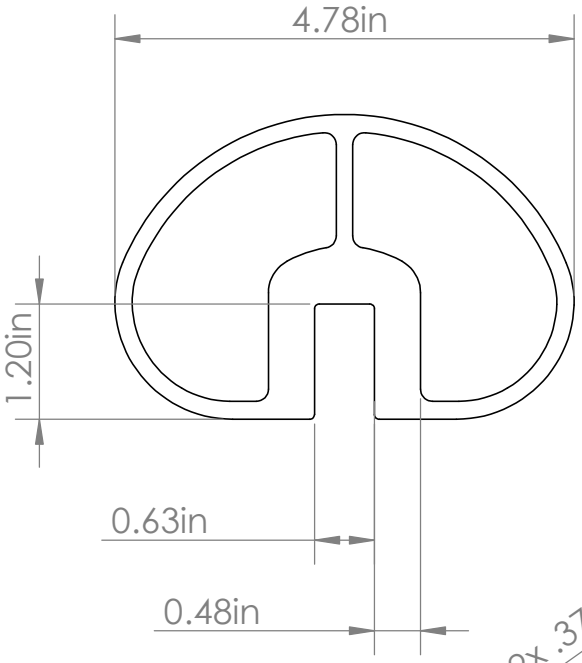

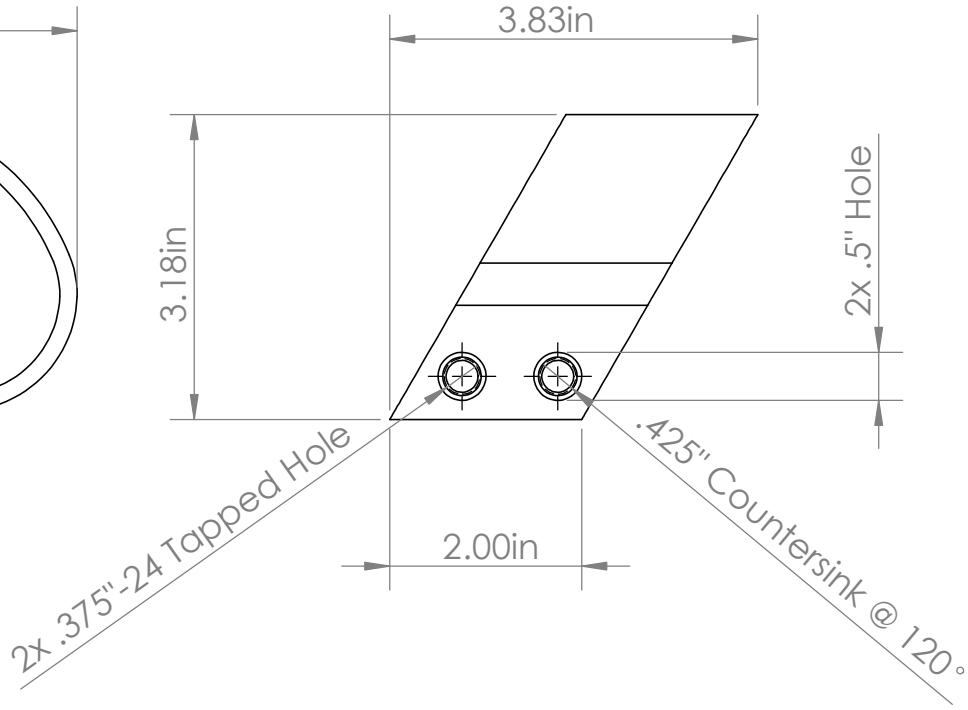

ALPINE SNOWGUARDS®

289 Harrel Street
Morrisville, VT 05661
Phone: 1.888.766.4273
Fax: 1.888.766.9994
Email: Info@alpinesnowguards.com

Scale: 1:2 | 8/3/2026

Assembly Sheet - PD82-AL

1. Installation to be completed in accordance with manufacturer's written specifications and installation instructions.
2. See spec sheet or contact manufacturer for detailed material, finishes, and configuration options.
3. Contact manufacturer for detailed layout.
4. Do not scale drawings.
5. Subject to change without notice.
6. For patent information, visit our Patent Page.

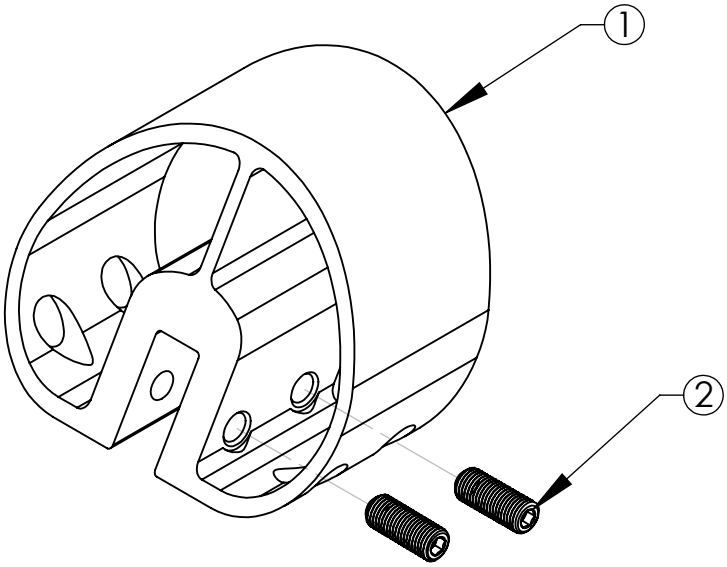

ITEM NO.	PART CODE	DESCRIPTION	QTY
1	PD82-AL	82 PAD-AL MILL FINISH	1
2	SET-O SS-.375-24X1	SS SET SCREW OP .3750-24X1	2

ALPINE SNOWGUARDS®

289 Harrel Street
Morrisville, VT 05661
Phone: 1.888.766.4273
Fax: 1.888.766.9994
Email: Info@alpinesnowguards.com

Scale: 1:2 | 10/15/20

PD82-AL Specification Sheet
Snow Guards

PART 1 – GENERAL

1.1 SUMMARY

A. WORK INCLUDES

1. PD82 Snow guard that does not penetrate roof by using clamp-to-seam technology.
2. Coordinate with installation of roof to assure proper placement of snow guards.
3. Provide appropriate snow guard and fasteners for roof system.

B. RELATED SECTIONS

1. Section 076000: Flashing and Sheet Metal	MasterFormat 2016 07 60 00
2. Section 076100: Metal Roofing	MasterFormat 2016 07 61 00
3. Section 077253: Snow Guards	MasterFormat 2016 07 72 53

1.2 SYSTEM DESCRIPTION

A. COMPONENTS

Bracket: An aluminum bracket with two (2) stainless steel set screws.

1. PD82-AL
2. SET-O SS-.375-24X1

B. DESIGN REQUIREMENTS

1. Spacing to be recommended by manufacturer or building engineer.
2. Install two set screws per snow guard.
3. It is important to design new structures or assess existing structures to make sure they can withstand retained snow loads.

1.3 SUBMITTAL

A. Submit manufacturer's specifications, standard detail drawings, installation instructions, and recommended layout.

1.4 QUALITY ASSURANCE

A. Installer to be experienced in installation of specified roofing material and snow guards for not less than 5 years in the area of the project

1.5 DELIVERY / STORAGE / HANDLING

A. Inspect material upon delivery and order replacements for any missing or defective items. Keep material dry, covered and off the ground until installed.

PART 2 – PRODUCTS

2.1 MANUFACTURER
A. Designed and exclusively distributed by Alpine SnowGuards®, a Division of Vermont Slate & Copper Services Inc.
289 Harrel St. Morrisville, VT 05661 | 888-766-4273 | www.alpinesnowguards.com

2.2 MATERIALS
A. PD82-AL Block – 6000 Series Aluminum.
B. SET-O SS-.375-24X1 – 304 Stainless Steel.

2.3 FINISH (choose one)
A. Mill Finish – standard
B. Powder Coated – available at additional cost

PART 3 – EXECUTION

3.1 EXAMINATION
A. Substrate
1. Inspect structure on which snow guard system is to be installed and verify that it will withstand any additional loading that it may incur. Notify general contractor of any deficiencies before installing Alpine SnowGuards.
2. Verify that roofing material has been installed correctly prior to installing snow guards.

3.2 INSTALLATION
A. Comply with architectural drawings and snow guard manufacturer’s recommendations for location of system. Comply with manufacturer's written installation instructions for installation and layout.

PD82-AL Installation Instructions

ROOF TYPES
STANDING SEAM
- Single Lock Panels
- Snap Lock Panels
- Double Lock Panels

CONSIDERATIONS
- The PD82 can only be used on vertical standing seams.
- When attaching clamps to seams that are machine-folded (regardless of panel profile and geometry), the PD82 clamp is designed to engage seams up to 5/8” wide.
- Two set screws must be installed per snow guard.
- For correct set screw placement on seam, reference the PD82-AL seam configuration document.

INSTALLATION
1. Position the clamps appropriately on the panel seam.
2. Using a 3/16" Allen-wrench attachment tip for a 1/4" drive screw gun, tighten and retighten the two set screws as the seam material compresses. On low seam profiles, a 4”-bit extension on the screw gun may help to access the set screws. Tighten set screws to a torque value of 140-180 inch-pounds.

STANDARD SNOW GUARD LAYOUT OPTIONS
- < 75 PSF (GSL)
- < 16/12 Roof Pitch
- Install one row for every 5’ of rafter length (Minimum of two rows)
- Clamp every other seam starting 12” from the eave edge
- Subsequent rows spaced one panel width upslope
- Maximum panel width 21” on center
- Any snow load exceeding 75 PSF, contact Alpine SnowGuards

Document version 06.08.26
07 72 53 Snow Guards

Snow Guard Maintenance

Our snow guards must be inspected annually. Any defects or damage in materials and/or workmanship must be reported to Alpine SnowGuards immediately. Seller will not be responsible for snow guard systems that have not been properly maintained.

- Ensure snow guard brackets, accessories & components are intact, have not been displaced, and show no signs of damage or wear.
- Inspect fasteners into roof deck.
- Inspect snow guard-related waterproofing and replace or repair where necessary to ensure roof integrity.
- Snow accumulation on roofs and rooftop solar panels must be removed to avoid damage to the roof or panels, the building structure, and anything below. Heavy snowfalls, drifting, and the gradual accumulation of snow and ice can lead to less-than-ideal snow guard performance.
- Check each clamp set screw with a torque wrench to ensure proper fastening has been maintained (clamp-to-seam models).
- Inspect sealant, tape, and adhesive. Remove and replace as needed.

Document Version 04.15.24

TIGER Drylac®

ral colors

exterior powder coatings

TIGER Drylac® Powder Coatings

series 49

Weather Resistant TGIC Polyester Powder Coatings for Exterior and Interior Applications

Features: Good weather resistance, good mechanical properties, very smooth flow, good storage stability, good coverage

Gloss Level: All colors featured in this chart are available as standard products in smooth glossy with a gloss level of 80-90+ (gloss level according to Garner 60 deg., ASTM D 523).

Typical Applications: Residential windows and doors, garden equipment, patio furniture, automotive accessories, bicycles, motorcycles, sporting goods.

Standard Packaging: 55 lb boxes or 5 lb mini packs

Datasheets: Periodically updated datasheets, showing cure parameters, test results, pre-treatment information and more are available for all products in this chart. Please contact your local TIGER Drylac office or visit www.tigerdrylac.com for the most current edition.

All Series 49 (custom and stock) products, made in the US or Canada are periodically re-certified and carry the UL (Underwriter Laboratories) Recognized Component mark. This UL mark is for all equipment and products intended for the US and Canadian market.

series 38

Highly Weather- and UV-Resistant Powder Coatings based on Super Durable TGIC Polyester for Exterior and Interior Applications

Features: Superior gloss and color retention, excellent weather resistance, good mechanical properties, superior chalk resistance, smooth flow, excellent edge coverage, good storage stability. AAMA 2604-05 conforming.

Gloss Level: All colors featured in this chart are available as standard products in smooth glossy with a gloss level of 80-90 (gloss level according to Gardner 60 deg., ASTM D 523).

Typical Applications: Agricultural and construction equipment, bus shelters, lighting fixtures, playground equipment, site furnishings, garage doors, stadium seating, fencing, automotive equipment, and marine applications.

Standard Packaging: 44 lb boxes and 5 lb mini packs

Datasheets: Periodically updated datasheets, showing cure parameters, test results, pre-treatment information and more are available for all products in this chart. Please contact your local TIGER Drylac office or visit www.tigerdrylac.com for the most current edition.

RAL colors not available: Due to pigmentation a small percentage of colors in the yellow, orange, red and purple range offer only limited UV stability and are therefore not available.

More standard Series 38 products: For additional architectural mattes, glossy and metallic products please see our Series 38 Super Durable Powder Coatings brochure.

Custom colors: Custom colors not shown in this brochure can be custom made in 7 to 10 days. Due to pigmentation some colors in the yellow, orange, red and purple range offer only limited UV stability. UV stability of custom colors in that color range must be verified by our production laboratories on a case by case basis.

TIGER Drylac continues to offer the largest product selection in the powder coating industry. For additional standard products and innovative powder coating solutions please see our numerous other brochures including:

TIGER Drylac Metallic

TIGER Drylac Special Effect

TIGER Drylac Essentials

TIGER Drylac Specialties

TIGER Drylac Series 38 Super Durable

TIGER Drylac Anti-Graffiti

TIGER Drylac Series 58 Super Durable
(for approved applicators only)

TIGER Drylac Series 75 Fluoropolymer
(for approved applicators only)

TIGER Drylac Wood

Specifying TIGER Drylac products

In order to eliminate possible errors in specifying our products, we recommend using the full product number rather then specifying the RAL number only. This product number not only describes the Series/Chemistry, but also the exact color, finish and sheen.

Please check with your local TIGER Drylac office or representative for assistance with specifications and suitability issues.

RAL

Having gained worldwide acceptance over the last few decades, the RAL is the most popular Central European Color Standard used today.

The RAL colors in this chart have been matched as closely as possible. Color chart production methods and influence from heat and light may account for slight color deviation from the actual RAL Standard. This chart therefore can not serve as a standard for RAL color production and is to be used as a guide for color planning and specification only.

To aid in final product selection please contact your regional Tiger Drylac location for a powder coated Q-Panel of the product of your choice.

Product Code Matrix

3 8 / 3 0 0 2 5

Chemistry

- **09** Polyester/Epoxy Hybrid
- **16** Acrylic Hybrid
- **28** Super Durable Polyester TGIC (for approved applicators only)
- **39** Polyester TGIC
- **44** Polyurethane
- **49** Polyester TGIC
- **59** Polyester TGIC-Free
- **69** Epoxy
- **75** Fluoropolymer (for approved applicators only)
- **89** Polyester/Epoxy Hybrid, Low/Fast Cure

Color Group
(starting with)

- **1** White
- **2** Yellow / Orange
- **3** Red
- **4** Blue
- **5** Green
- **6** Brown
- **7** Grey
- **8** Black
- **9** Metallic

RAL **1000** 49/15200 38/15000	RAL **1015** 49/15320 38/15015	RAL **1033** 49/22240	RAL **2012** 49/24690	RAL **3014** 49/31080	RAL **4004** 49/31020 38/30024
RAL **1001** 49/15190 38/15001	RAL **1016** 49/22520 38/20016	RAL **1034** 49/23910	RAL **3000** 49/33120 38/30000	RAL **3015** 49/33670	RAL **4005** 49/42780
RAL **1002** 49/22590 38/20002	RAL **1017** 49/22510 38/20017	RAL **1037** 49/20096	RAL **3001** 49/31120 38/30001	RAL **3016** 49/31980 38/30016	RAL **4006** 49/32090
RAL **1003** 49/22580	RAL **1018** 49/21830 38/20018	RAL **2000** 49/24570	RAL **3002** 49/31110 38/30002	RAL **3017** 49/31060	RAL **4007** 49/32540 38/30025
RAL **1004** 49/22570 38/20004	RAL **1019** 49/13660 38/15019	RAL **2001** 49/24560 38/23170	RAL **3003** 49/31100 38/30003	RAL **3018** 49/31050	RAL **4008** 49/32280
RAL **1005** 49/22560 38/20005	RAL **1020** 49/22500 38/20020	RAL **2002** 49/24550 38/25002	RAL **3004** 49/33900 38/30004	RAL **3020** 49/31040 38/30021	RAL **4009** 49/34740
RAL **1006** 49/22550 38/20006	RAL **1021** 49/22280 38/20021	RAL **2003** 49/24540	RAL **3005** 49/31900 38/30005	RAL **3022** 49/33700	RAL **4010** 49/40490
RAL **1007** 49/22540	RAL **1023** 49/22490 38/20023	RAL **2004** 49/24530	RAL **3007** 49/31910 38/30007	RAL **3027** 49/33660	RAL **5000** 49/42200 38/40000
RAL **1011** 49/15180 38/15011	RAL **1024** 49/22480 38/20024	RAL **2008** 49/24340	RAL **3009** 49/31920 38/30009	RAL **3031** 49/34730 38/30031	RAL **5001** 49/42210 38/40001
RAL **1012** 49/22530 38/20012	RAL **1027** 49/22470 38/20027	RAL **2009** 49/24360	RAL **3011** 49/31090 38/30011	RAL **4001** 49/43160	RAL **5002** 49/42220 38/40002
RAL **1013** 49/11280 38/10013	RAL **1028** 49/22460	RAL **2010** 49/24520 38/25001	RAL **3012** 49/31940 38/30012	RAL **4002** 49/31030 38/30008	RAL **5003** 49/42230 38/40003
RAL **1014** 49/15170 38/15014	RAL **1032** 49/22450 38/20032	RAL **2011** 49/24580	RAL **3013** 49/31950 38/30013	RAL **4003** 49/32270	RAL **5004** 49/42240 38/40004

RAL **5005** 49/43190 38/40010	RAL **5019** 49/42360 38/40019	RAL **6006** 49/52870 38/50006	RAL **6016** 49/51020 38/50016	RAL **6027** 49/50990 38/50027	RAL **7006** 49/72580 38/70006
RAL **5007** 49/42250 38/40007	RAL **5020** 49/44270 38/40018	RAL **6007** 49/52860 38/50007	RAL **6017** 49/52780 38/50017	RAL **6028** 49/52650 38/50028	RAL **7008** 49/72570 38/70008
RAL **5008** 49/42260 38/40008	RAL **5021** 49/41190 38/40021	RAL **6008** 49/53240 38/50008	RAL **6018** 49/52720 38/50018	RAL **6029** 49/52640 38/50029	RAL **7009** 49/72770 38/70009
RAL **5009** 49/42270 38/40009	RAL **5022** 49/42390 38/40022	RAL **6009** 49/52840 38/50009	RAL **6019** 49/51000 38/50019	RAL **6032** 49/52630 38/50032	RAL **7010** 49/72560 38/70014
RAL **5010** 49/42280 38/40016	RAL **5023** 49/44650 38/40023			RAL **6033** 49/55010 38/50033	RAL **7011** 49/72790 38/70011
RAL **5011** 49/43180 38/40011	RAL **5024** 49/44660 38/40024			RAL **6034** 49/55020 38/50034	RAL **7012** 49/71180 38/70012
RAL **5012** 49/43170 38/40012	RAL **6000** 49/53160 38/50000	RAL **6010** 49/52830 38/50031	RAL **6020** 49/52710 38/50020	RAL **7000** 49/72700 38/70000	RAL **7013** 49/72550 38/70013
RAL **5013** 49/42310 38/40013	RAL **6001** 49/52900 38/50005	RAL **6011** 49/52820 38/50011	RAL **6021** 49/52700 38/50021	RAL **7001** 49/72710 38/70003	RAL **7015** 49/72820 38/70015
RAL **5014** 49/42320 38/40014	RAL **6002** 49/52890 38/50023	RAL **6012** 49/51540 38/50012	RAL **6022** 49/52690 38/50022	RAL **7002** 49/72720 38/70007	RAL **7016** 49/72830 38/70016
RAL **5015** 49/42330 38/40015	RAL **6003** 49/52880 38/50003	RAL **6013** 49/52810 38/50013	RAL **6024** 49/52680 38/50024	RAL **7003** 49/72600 38/70017	RAL **7021** 49/72540 38/70021
RAL **5017** 49/40760 38/40017	RAL **6004** 49/50980 38/50004	RAL **6014** 49/52800 38/50014	RAL **6025** 49/52670 38/50025	RAL **7004** 49/73300 38/70004	RAL **7022** 49/72850 38/70022
RAL **5018** 49/41140 38/40020	RAL **6005** 49/50670 38/50002	RAL **6015** 49/52790 38/50015	RAL **6026** 49/52660 38/50026	RAL **7005** 49/72590 38/70005	RAL **7023** 49/72530 38/70023

exterior

RAL **7024** 49/72870 38/70024	RAL **7040** 49/75470 38/70046	RAL **8007** 49/66120 38/60007	RAL **8025** 49/66050 38/60025
RAL **7026** 49/72880 38/70026	RAL **7042** 49/73250 38/70042	RAL **8008** 49/66110 38/60008	RAL **8028** 49/66500 38/60028
RAL **7030** 49/72890 38/70027	RAL **7043** 49/72460 38/70043	RAL **8011** 49/66100 38/60011	RAL **9001** 49/10016 38/10001
RAL **7031** 49/72520 38/70031	RAL **7044** 49/75480 38/70044	RAL **8012** 49/66090 38/60012	RAL **9002** 49/70520 38/10002
RAL **7032** 49/72910 38/70001	RAL **7045** 49/77890 38/70045	RAL **8014** 49/65230 38/60010	RAL **9003** 49/11400 38/10003
RAL **7033** 49/72510 38/70033	RAL **7046** 49/72010 38/70002	RAL **8015** 49/63040 38/60015	RAL **9004** 49/81950 38/80004
RAL **7034** 49/72500 38/70034	RAL **7047** 49/72020 38/70047	RAL **8016** 49/66080 38/60016	RAL **9005** 49/82830 38/80010
RAL **7035** 49/73510 38/70035	RAL **8000** 49/66170 38/60000	RAL **8017** 49/65220 38/60017	RAL **9010** 49/11500 38/10004
RAL **7036** 49/72950 38/70036	RAL **8001** 49/66160 38/60005	RAL **8019** 49/65490 38/60019	RAL **9011** 49/80540 38/80001
RAL **7037** 49/72480 38/70037	RAL **8002** 49/66150 38/60002	RAL **8022** 49/63080 38/60022	RAL **9016** 49/11340 38/10010
RAL **7038** 49/72470 38/70038	RAL **8003** 49/66140 38/60003	RAL **8023** 49/66070 38/60023	RAL **9017** 49/80550 38/80017
RAL **7039** 49/71020 38/70039	RAL **8004** 49/66130 38/60004	RAL **8024** 49/66060 38/60024	RAL **9018** 49/72490 38/10018

TIGER Worldwide Network

EUROPE

AUSTRIA
TIGER Coatings GmbH & Co. KG
A-4600 Wels
phone +43 / (0)7242 / 400-0
fax +43 / (0)7242 / 650 08
office@tiger-coatings.com
www.tiger-coatings.com

BELGIUM
Mr. Eric Kun
B-3680 Maaseik
phone +32 / (0)497 / 41 57 97
fax +32 / (0)89 / 56 78 58
office.be@tiger-coatings.com

C&E Warehousing
B-3640 Kinrooi
phone +32 / (0)497 / 92 25 70
fax +32 / (0)89 / 56 78 58

BOSNIA & HERZEGOVINA
Klio d.o.o.
BiH-75300 Lukavac
phone +387 / 35 / 555 392
fax +387 / 35 / 553 256
office.bih@klio.hr

Klio 1
BiH-71210 Ilidža, Sarajevo
phone +387 / 33 / 626 621

BULGARIA
Deyacolor LTD
BG-1113 Sofia 13 post box no. 265
phone/fax +359 / 2 978 58 61
office@deyacolor.com

CROATIA
Klio d.o.o.
CRO-10360 Zagreb Sesvete
phone +385 / (0)1 / 200 90 41
fax +385 / (0)1 / 200 90 43
klio@klio.hr

CZECH REPUBLIC
TIGERLAK, s.r.o.
CZ-620 00 Brno
phone +420 / 545 429 110
fax +420 / 545 229 209
office.cz@tiger-coatings.com

DENMARK
Ms. Brigitte Pudor Gullev
DK-6200 Aabenraa
phone +45 / 73 62 13 23
mobil +45 / 21 20 45 20
fax +45 / 73 62 13 24
office.dk@tiger-coatings.com

FRANCE
TIGER S.A.R.L.
F-69480 Anse
phone +33 / (0)474 / 67 13 70
fax +33 / (0)474 / 67 10 42
office.fr@tiger-coatings.com

GERMANY
KLOZ Kunststofftechnik GmbH
D-70736 Fellbach-Oeffingen
phone +49 / (0)711 / 95 19 80 32
fax +49 / (0)711 / 518 07 50
info@kloz-kunststofftechnik.de

KLOZ Wickede
D-58739 Wickede-Ruhr
phone +49 / (0)2377 / 36 25
fax +49 / (0)2377 / 26 22

Jochen Hänel Handelsvertretung
D-65239 Hochheim a. M.-Süd
phone +49 / (0)6146 / 83 58 81
fax +49 / (0)6146 / 83 58 84
jhaenel@gmx.de

Boris Herrmann Handelsvertretung
D-44309 Dortmund
phone +49 / (0)231 / 25 70 12
fax +49 / (0)231 / 25 70 15
b.herrmann@tiger-coatings.com

Thomas Leitzke Handelsvertretung
D-47647 Kerken
phone +49 / (0)2833 / 57 39 32
fax +49 / (0)2833 / 57 39 33
t.leitzke@tiger-coatings.com

GREAT BRITAIN
TIGER COATINGS UK LTD
Solihull, West Midlands, B93 9EG
phone +44 / (0) 1564 778 866
fax +44 / (0) 1564 778 903
office.gb@tiger-coatings.com

HUNGARY
TIGERLAKK Kft.
H-1183 Budapest
phone +36 / 1 / 293 90 20
fax +36 / 1 / 297 45 49
office.hu@tiger-coatings.com

ITALY
TIGER Drylac Italia s.r.l.
I-24121 Bergamo
phone +39 / 035 / 417 39 67
fax +39 / 035 / 22 37 11
office.it@tiger-coatings.com

LITHUANIA, LATVIA
UAB „LAKMALIT"
LT-3000 Kaunas
phone +370 / 7 / 32 37 41, 32 34 95
fax +370 / 7 / 32 40 87
kaunas@lakmalit.lt

THE NETHERLANDS
Mr. Ben de Jong
NL-2133 GJ Hoofddorp
phone +31 / (0)6 / 419 956 80
fax +31 / (0)23 / 565 58 72
office.nl@tiger-coatings.com

POLAND
Tensor Consulting
PL-04512 Warszaw
phone +48 / (0)22 / 815 42 79
fax +48 / (0)22 / 815 42 79
ajelonek@tensor.com.pl

ROMANIA
SC TIGER Coatings Romania SRL
R-010631 Bucuresti
phone +40 / (0)21 / 314 77 37
fax +40 / (0)21 / 314 77 87
office.ro@tiger-coatings.com

RUSSIA
OOO TECHNOKOLOR-M
107370 Moscow, Russia
phone +007 / 495 / 966 75 08
fax +007 / 495 / 963 47 45
sales@technocolor.ru

SERBIA
Klio NS d.o.o.
SCG-21000 Novi Sad
phone +381 / 21 / 478 01 08
fax +381 / 21 / 641 00 40
office@klio.co.yu

SLOVAKIA
TIGERLAK Slovakia spol.s r.o.
SK-902 01 Pezinok
phone +421 / (0)33 / 640 00 71
fax +421 / (0)33 / 640 00 72
office.sk@tiger-coatings.com

SLOVENIA
T-Lotus d.o.o.
SLO-9240 Ljutomer
phone +386 / (0)2 / 583 18 79
fax +386 / (0)2 / 583 18 80
kontakt@t-lotus.si

SPAIN
TIGER Coatings GmbH & Co. KG
12001 Castellón - SPAIN
phone +34 / (0)664 / 328 449
fax +34 / (0)964 / 050 309
office.es@tiger-coatings.com

SWITZERLAND
FEYCO AG
CH-9430 St. Margrethen SG
phone +41 / (0)71 / 747 84 11
fax +41 / (0)71 / 747 85 10
info@feyco.ch

TURKEY
Enki Iç ve Dis Tic. Paz. Dan. San. Tic. Ltd.Sti.
No: 26 Dk: 1Kadıköy-Istanbul
phone +90 / (0)216 / 467 38 57
fax +90 / (0)216 / 467 39 13
b.gurkan@tiger-coatings.com

UKRAINE
Interfarb - Ukraina
UA-79012 Lvov
phone/fax +380 / 322 / 40 23 11
phone/fax +380 / 322 / 97 10 76
interfarb@utel.net.ua

THE AMERICAS

ARGENTINA
Glass + Partner S.A.
AR-1429 Buenos Aires
phone +54 / 114 / 541 70 58
fax +54 / 114 / 541 70 58
glasspartner@arnet.com.ar

BRAZIL
TIGER Drylac do Brasil Ltda.
13295-000 ITUPEVA SP
phone +55 / 11 / 44 96 53 27
fax +55 / 11 / 44 96 65 14
office.br@tiger-coatings.com

CANADA
ONTARIO: TIGER Drylac Canada Inc.
Guelph, Ontario, N1G 4P5
phone +1 / 519 / 766 47 81
fax +1 / 519 / 766 47 87
info@tigerdrylaccanada.com

QUEBEC: TIGER Drylac Canada Inc.
Anjou, Quebec H1E 1P2
phone +1 / 514 / 351 53 31
fax +1 / 514 / 351 40 15
tigerqc@microtec.net

CALGARY: TIGER Drylac Canada Inc.
Calgary, Alberta Canada T2E 6L7
phone +1 / 403 / 398 97 23
fax +1 / 403 / 398 97 25
info@tigercalgary.bidcon.net

VANCOUVER: TIGER Drylac Canada Inc.
Delta, BC V3M 5P8
phone +1 / 604 / 540 97 26
fax +1 / 604 / 540 97 25
vancouver@tigerdrylaccanada.com

CHILE
TIGER Drylac de Chile Ltda.
San Ramon, Santiago de Chile
phone +56 / 2 / 511 56 59
fax +56 / 2 / 511 56 59
office.cl@tiger-coatings.com

MEXICO
TIGER Drylac MEXICO S.A. DE C.V.
Col. Santa Cruz Acatlan, Naucalpan
Edo. de Mexico C.P. 53150
phone +52 / 555 / 363 12 14
fax +52 / 555 / 363 17 39
mexico@tigerdrylac.com

U.S.A.
TIGER Drylac U.S.A., Inc. (HQ´s)
Ontario, CA 91761
phone +1 / 909 / 930 91 00
fax +1 / 909 / 930 91 11
customerservicewest@tigerdrylac.com

TIGER Drylac U.S.A., Inc.
St. Charles, IL 60174
phone +1 / 630 / 513 99 99
fax +1 / 630 / 513 99 98
customerservicemw@tigerdrylac.com

TIGER Drylac U.S.A., Inc. (HQ´s)
Reading, PA 19605
phone +1 / 610 / 926 81 48
fax +1 / 610 / 926 81 49
customerserviceeast@tigerdrylac.com

TIGER Drylac U.S.A., Inc.
Kennesaw, GA 30144
phone +1 / 770 / 218 24 90
fax +1 / 770 / 218 24 95
customerservicese@tigerdrylac.com

TIGER Drylac U.S.A., Inc.
Arlington TX 76011
phone +1 / 817 / 277 79 95
fax +1 / 817 / 277 19 31
customerservicesouth@tigerdrylac.com

MIDDLE EAST

UNITED ARAB EMIRATES
TIGER Coatings Middle East (FZE)
Sharjah
phone +971 / (0)6 / 559 06 23
fax +971 / (0)6 / 559 06 24
office.ae@tiger-coatings.com

ASIA

CHINA
TIGER Drylac (Taicang) Co. Ltd.
Taicang, Jiangsu 215400
P.R. China
phone +86 / (0)512 / 53 56 06 19
fax +86 / (0)512 / 53 95 50 95
office.cn@tiger-coatings.com

TIGER Drylac Beijing Warehouse
Shibali dian Chaoyang, Beijing
P.R. China
phone +86 / (0)10 / 87 30 44 38
fax +86 / (0)10 / 67 70 35 04

TIGER Drylac Guangzhou Warehouse
Nancun town, Panyu Guangzhou
P.R. China
phone +86 / (0)20 / 84 59 29 01
fax +86 / (0)20 / 34 57 94 97

HONG KONG
TIGER Coatings Hong Kong Limited
Kowloon, Hong Kong
phone +852 / 27 81 55 82
fax +852 / 27 82 58 86
office.hk@tiger-coatings.com

INDIA
National Corporation
Bangalore-560 002, INDIA
phone +91 / (0)80 / 222 265 54
fax +91 / (0)80 / 222 148 00
rsachdev@vsnl.com

JAPAN
TIGER Drylac JAPAN K.K.
Kanagawa, 229-1135, JAPAN
phone +81 / (0)42 / 760 60 56
fax +81 / (0)42 / 760 60 57
office.jp@tiger-coatings.com

MALAYSIA
TIGER Drylac MALAYSIA Sdn. Bhd.
50250, Kuala Lumpur
phone +60 / (0)3 / 20 39 43 15
fax +60 / (0)3 / 20 31 83 59
office.my@tiger-coatings.com

SINGAPORE
TIGER Drylac SINGAPORE Pte. Ltd.
SINGAPORE 759196
phone +65 / 67 59 94 33
fax +65 / 67 59 94 36
office.sg@tiger-coatings.com

TAIWAN
Vigorousport Int. Co., Ltd.
Taichung, TAIWAN
phone +886 / (0)4 / 23 82 21 23
fax +886 / (0)4 / 23 82 21 11
office.tw@tiger-coatings.com

THAILAND
Grand Siam Commercial Co., Ltd.
Bangkok 10320
phone +66 / 2 / 691 62 74
fax +66 / 2 / 691 22 25
apichart@samart.co.th

VIETNAM
TIGER Drylac Vietnam Co., Ltd.
Binh Duong Province
phone +84 / 650 / 758 370
fax +84 / 650 / 758 371
office.vn@tiger-coatings.com

TIGER Drylac Ha Noi Warehouse
Ha Noi
phone +84 / 4 / 762 81 65
fax +84 / 4 / 762 81 64

POWDER COATED TOUGH™

Member of the Powder Coating Institute
and the U.S. Green Building Council