ALPINE SNOWGUARDS®

WR316-GAL Wire Loop Pad Style Snow Guard
Submittal Document Set



ROOF TYPES
- New or Existing Synthetic Slate or Shake

AVAILABLE MATERIALS
- Galvanized Steel (GAL)

AVAILABLE FINISHES
- Mill Finish
- Powder Coating (additional charge) using RAL TIGER Drylac® Exterior Colors

FEATURES/ADVANTAGES
- 45lb Steel Wire Electroplate Galvanized
- Single welded eyelet attachment point
- Minimalistic nature of this snow guard reduces the appearance of its presence on a roof slope
- Overall height is 2 3/8"
- Overall length 6 1/2"
- Loop design allows for use of an appropriate mechanical fastener

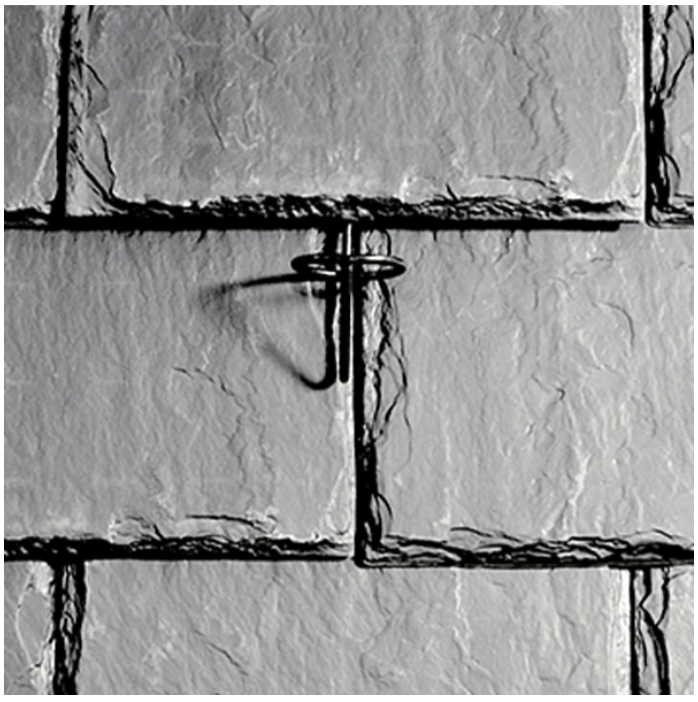

Cut Sheet - WR316-GAL

1. Installation to be completed in accordance with manufacturer's written specifications and installation instructions.
2. See spec sheet or contact manufacturer for detailed material, finishes, and configuration options.
3. Contact manufacturer for detailed layout.
4. Do not scale drawings.
5. Subject to change without notice.
6. For patent information, visit our Patent Page.

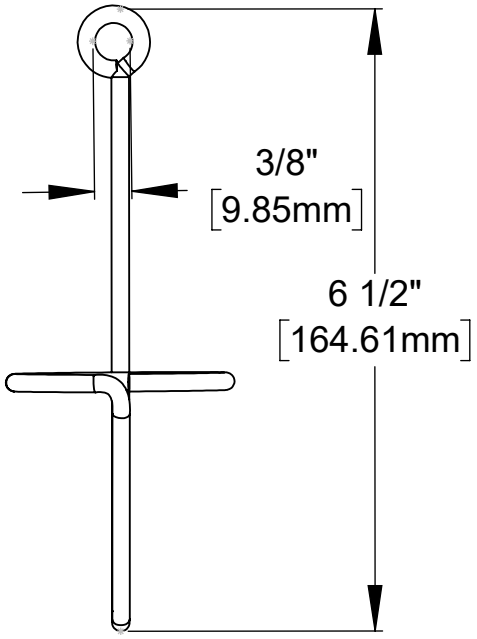

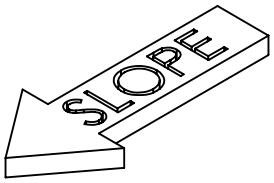

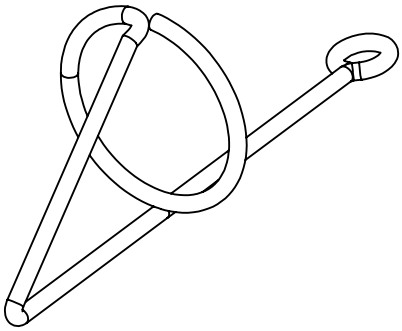

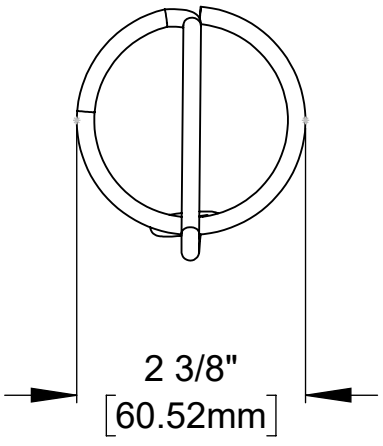

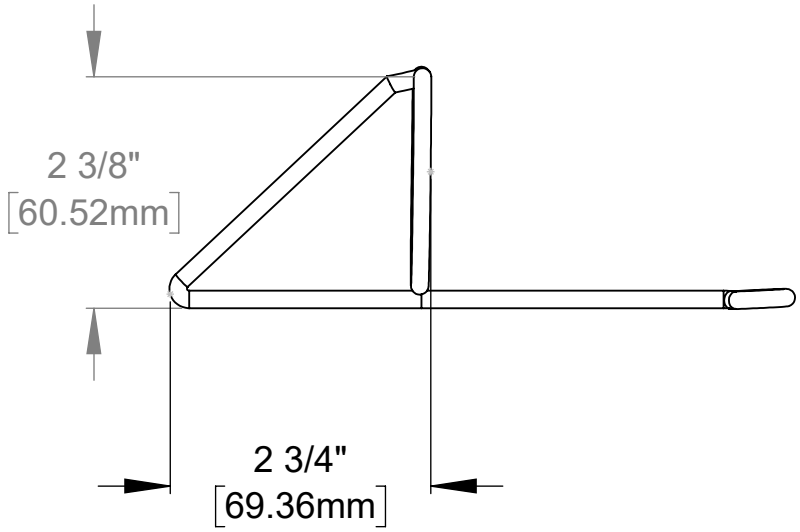

ALPINE SNOWGUARDS®

289 Harrel Street
Morrisville, VT 05661
Phone: 1.888.766.4273
Fax: 1.888.766.9994
Email: Info@alpinesnowguards.com

Scale: 1:2 | 04/01/2025

Assembly Sheet - WR316-GAL

1. Installation to be completed in accordance with manufacturer's written specifications and installation instructions.
2. See spec sheet or contact manufacturer for detailed material, finishes, and configuration options.
3. Contact manufacturer for detailed layout.
4. Do not scale drawings.
5. Subject to change without notice.
6. For patent information, visit our Patent Page.

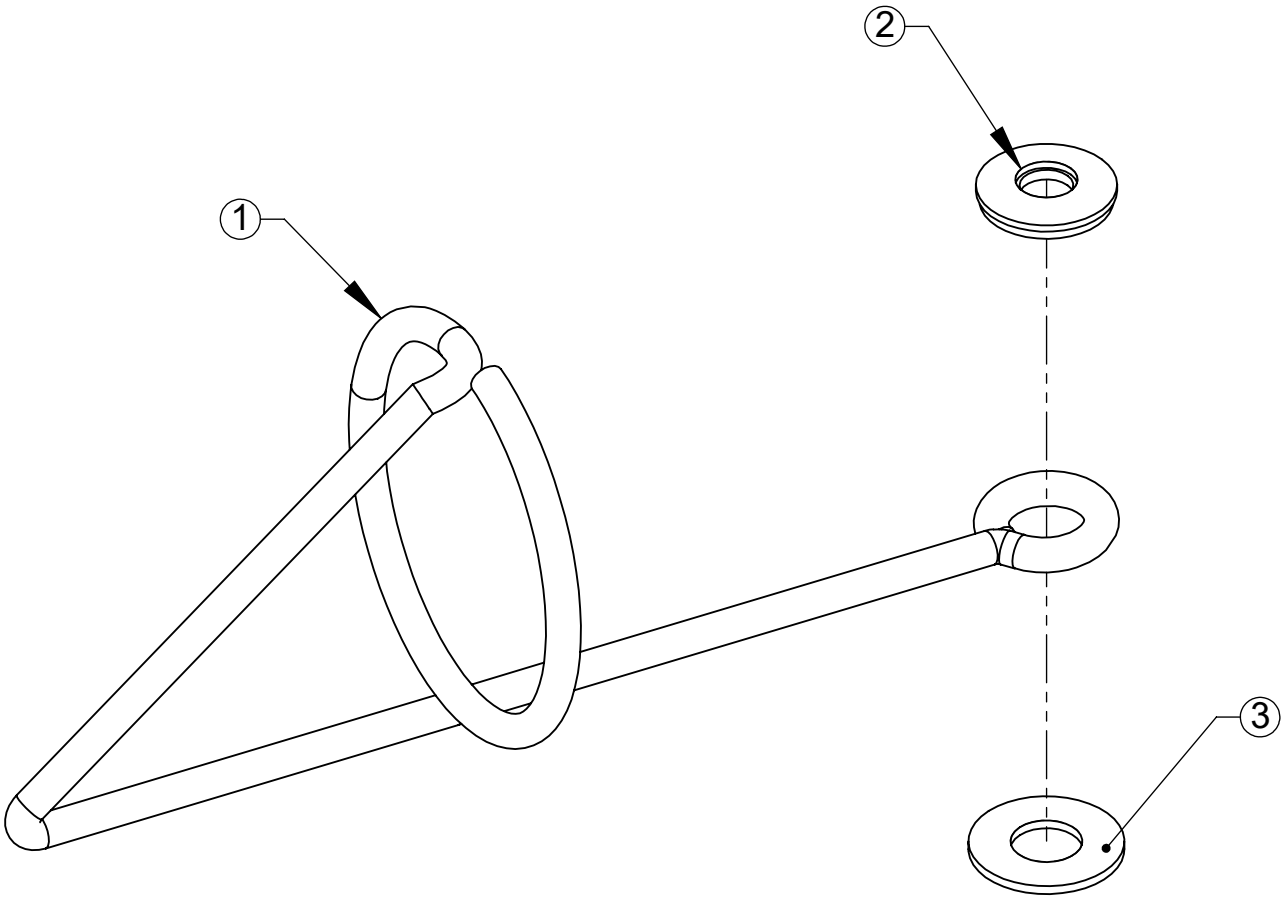

ITEM NO.	PART CODE	DESCRIPTION	QTY
1	WR316-GAL	3/16" GALVANIZED STEEL WELDED MILL FINISH	1
2	W-NEO SS-.34	SS NEO WASHER .34IDX.75OD	1
3	W-EPDM .375X.813	EPDM SEAL WASHER .375IDX.813OD	1

ALPINE SNOWGUARDS®

289 Harrel Street
Morrisville, VT 05661
Phone: 1.888.766.4273
Fax: 1.888.766.9994
Email: Info@alpinesnowguards.com

Scale: 1:1 | 06/19/2026

WR316-GAL Wire Loop HD Specification Sheet
Snow Guards

PART 1 – GENERAL

1.1 SUMMARY

A. WORK INCLUDES

1. Wire Loop HD (WR316-GAL) snow guard that attaches directly to roof deck.
2. Coordinate with installation of the roof to assure proper placement of snow guards.
3. Provide appropriate snow guard and fasteners for the roof system.

B. RELATED SECTIONS

1. Section 076000: Flashing and Sheet Metal	MasterFormat 2016 07 60 00
2. Section 073100: Shingles & Shakes	MasterFormat 2016 07 31 00
3. Section 073200: Roofing Tiles	MasterFormat 2016 07 32 00
4. Section 077253: Snow Guards	MasterFormat 2016 07 72 53

5. Division 7: Thermal and Moisture Protection

1.2 SYSTEM DESCRIPTION

A. COMPONENTS

1. Wire Loop HD (WR316-GAL) snow guard system consists of individual metal wire snow guards, EPDM sealing washer, and EPDM bonded washer.
2. Fasteners
   a. To be of metal compatible with snow guards.
   b. Fasteners should be selected for compatibility with the roof deck.
   c. Fastener strength should exceed or be equal to that of the snow guard system.

B. DESIGN REQUIREMENTS

1. Spacing to be recommended by manufacturer or building engineer.
2. Minimum 1 fastener, 1 EPDM sealing washer, 1 EPDM bonded washer per snow guard.
3. It is important to design new structures or assess existing structures to make sure they can withstand retained snow loads.

1.3 SUBMITTAL

A. Submit manufacturer's specifications, standard detail drawings, installation instructions, and recommended layout.

1.4 QUALITY ASSURANCE

A. Installer to be experienced in installation of specified roofing material and snow guards for not less than 5 years in the area of the project.

1.5 DELIVERY / STORAGE / HANDLING

A. Inspect material upon delivery and order replacements for any missing or defective items. Keep material dry, covered and off the ground until installed.

WR316-GAL Wire Loop HD Specification Sheet
Snow Guards

PART 2 – PRODUCTS

2.1 MANUFACTURER

A. Designed and exclusively distributed by Alpine SnowGuards®, a Division of Vermont Slate & Copper Services, Inc.
289 Harrel St., Morrisville, VT 05661 | 888-766-4273 | www.alpinesnowguards.com

2.2 MATERIALS

A. WR316-GAL, 45lb steel wire electroplate galvanized
B. W-EPDM .375X.813, EPDM Sealing Washer
C. W-NEO SS-.34, EPDM–SS-Bonded Washer

2.3 FINISH

A. Mill Finish
B. Custom Color Powder Coated – additional charge

PART 3 – EXECUTION

3.1 EXAMINATION

A. Substrate
1. Inspect structure on which snow guard system is to be installed and verify it will withstand any additional loading that it may incur. Notify general contractor of any deficiencies before installing snow guards.
2. Verify roofing material has been installed correctly prior to installing snow guards.

3.2 INSTALLATION

A. Comply with architectural drawings and snow guard manufacturer’s recommendations for location of system. Comply with manufacturer's written installation instructions for installation and layout.

Document Version 06.04.2026
07 72 53 Snow Guard

WR316-GAL Wire Loop Snow Guard Installation Instructions

ROOF TYPES

- New or Existing Synthetic Slate or Shake

INSTALLATION

New Roof Applications (interlocking, single or multi-width synthetic shingles):

1. Install two courses of shingles.
2. Install row of snow guards:
   a.) Insert fastener through bonded washer, eyelet of snow guard, and sealing washer. Fasten into the roof deck at or above the nail line of the shingle in the keyway (Figure 1).
   b.) Install additional shingle courses, and repeat for entire roof surface, completing snow guard layout.
   Note: *Do not overtighten fasteners. Overtightening may cause damage to EPDM layer on the washer and may cause the snow guard to lift off the roof surface.*

Existing Roof Applications and ALL F-Wave Revia Applications:

1. Start installing on the 2nd course of shingles.
2. Insert included EPDM sealing washer into small top loop of Wire Loop HD snow guard. Backfill with roof manufacturer-approved sealant.
3. Insert fastener through EPDM–SS-Bonded Washer and eyelet of snow guard. Fasten into the face of shingle. (For F-Wave Revia Estate Series placement, see Figure 2)
4. Apply roof manufacturer's approved sealant around the fastener after the snow guard is secured to the roof deck.
   Note: *To maintain integrity of adhesive layer between F-Wave Revia Shingles, do not insert or install snow guards between shingle layers.*
5. Install additional shingle courses, and repeat for entire roof surface, completing snow guard layout.
   Note: *Do not overtighten fasteners. Overtightening may cause damage to EPDM layer on washer and may cause snow guard to lift off roof surface.*

Figure 1

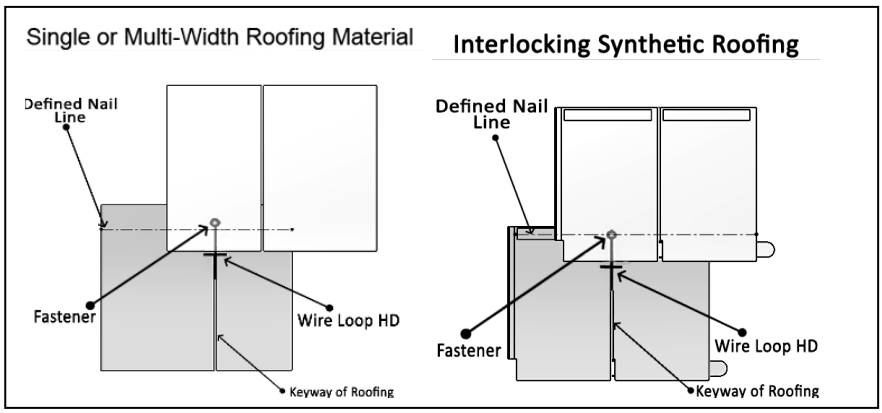

Figure 2

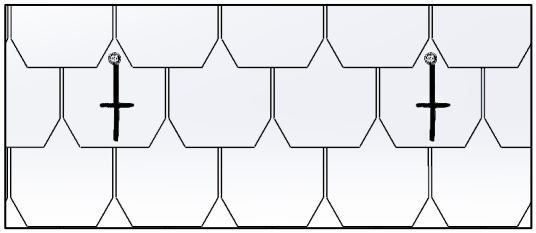

WIRE LOOP HD STYLE SNOW GUARD LAYOUT FOR NEW SYNTHETIC SHINGLE ROOFING

- Contact manufacturer for detailed layout.
- First row of snow guards is placed above outer most wall or support of the building.
- Quantities per square should be installed in a regular pattern over entire roof surface to within 5 feet of the ridge.
- The quantity per square is based on a 225 lb. holding capability (includes 2.0 X safety margin) per snow guard.
- If you have any questions, please contact us at 888-766-4273.

WR316-GAL Wire Loop Snow Guard Installation Instructions

QUANTITIES FOR WIRE LOOP SNOW GUARD FOR SYNTHETIC SHINGLE ROOFS

PROJECT DETAIL			LAYOUT DETAILS		
Roof Pitch	Rafter Length	Ground Snow Load (psf)	Layout	Est. Snow Guard Qty	Spacing
8/12 or Less	15' or Less	60 psf or Less	3-Row Pattern	17 per 10' of Eave	3 rows, 24" on center horizontally with the middle row staggered 12". Rows vertically spaced every other course.
	Greater than 15'	60 psf or Less	2 x 4 Pattern	12 Per Roofing Square	Space rows 2' vertically by 4' horizontally to within 5' of the ridge.

WIRE LOOP HD THREE-ROW PATTERN

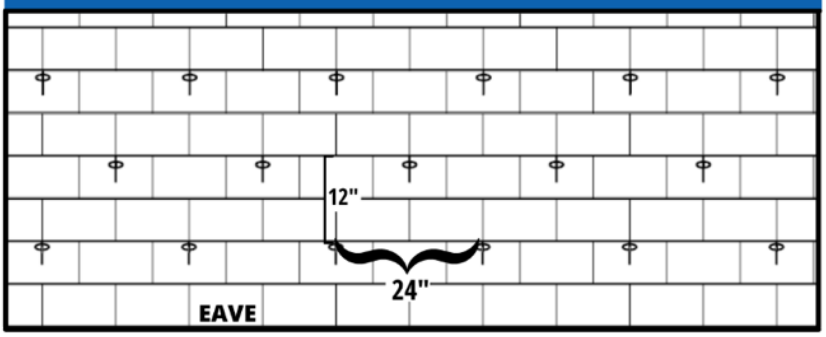

12 PER SQUARE / 2 X 4 PATTERN

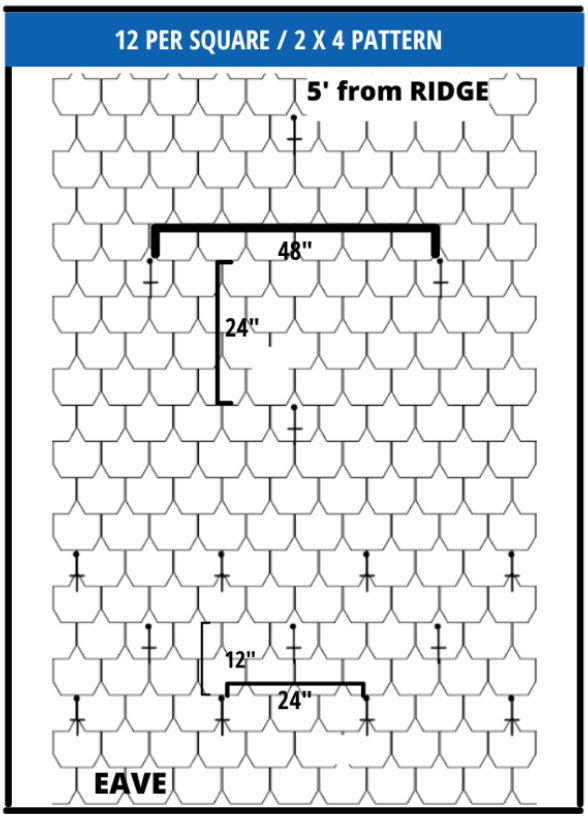

12 PER SQUARE / 2 X 4 PATTERN

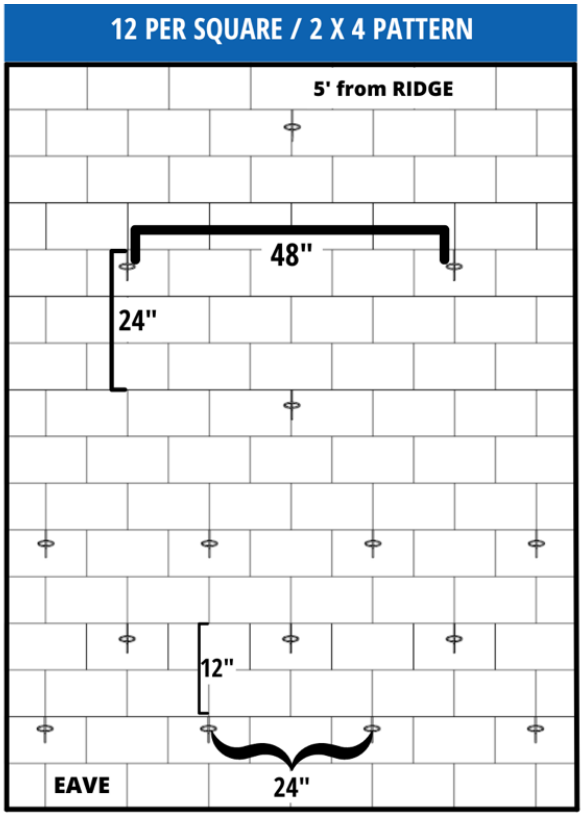

Document version 06.04.2026
07 72 53 SNOW GUARDS

Snow Guard Maintenance

Our snow guards must be inspected annually. Any defects or damage in materials and/or workmanship must be reported to Alpine SnowGuards immediately. Seller will not be responsible for snow guard systems that have not been properly maintained.

- Ensure snow guard brackets, accessories & components are intact, have not been displaced, and show no signs of damage or wear.
- Inspect fasteners into roof deck.
- Inspect snow guard-related waterproofing and replace or repair where necessary to ensure roof integrity.
- Snow accumulation on roofs and rooftop solar panels must be removed to avoid damage to the roof or panels, the building structure, and anything below. Heavy snowfalls, drifting, and the gradual accumulation of snow and ice can lead to less-than-ideal snow guard performance.
- Check each clamp set screw with a torque wrench to ensure proper fastening has been maintained (clamp-to-seam models).
- Inspect sealant, tape, and adhesive. Remove and replace as needed.

Alpine SnowGuards®, a Division of Vermont Slate & Copper Services, Inc.
289 Harrel St., Morrisville, VT 05661 | 888-766-4273 | info@alpinesnowguards.com | www.alpinesnowguards.com

TIGER Drylac® Series 149/138 is available in a matte finish (gloss level 20-30) in the following RAL colors as standard products:

RAL color	Product ID	RAL color	Product ID	RAL color	Product ID	RAL color	Product ID	RAL color	Product ID
RAL 1003	149/21660	RAL 3003	149/30022	RAL 5013	149/49940 138/49940	RAL 7024	149/70029	RAL 8014	149/62090 138/62090
RAL 1007	149/20032	RAL 3004	149/31320	RAL 5015	149/47520	RAL 7032	149/70062 138/70062	RAL 8019	149/62060 138/62060
RAL 1013	149/15042 138/15010	RAL 3011	149/30011	RAL 5017	149/40360 138/40360	RAL 7035	149/72160 138/72160	RAL 8028	149/63930 138/63930
RAL 1018	149/20028	RAL 3020	149/30004	RAL 6002	149/50420	RAL 7037	149/70349 138/70349	RAL 9001	149/10660 138/10660
RAL 1019	149/15370 138/15370	RAL 5002	149/46170	RAL 7001	149/77900 138/77900	RAL 7038	149/70276 138/70276	RAL 9002	149/71750 138/71750
RAL 1021	149/21930	RAL 5003	149/40065	RAL 7011	149/70415 138/70415	RAL 7039	149/73213 138/73213	RAL 9003	149/10268 138/10268
RAL 1023	149/20723	RAL 5005	149/47080	RAL 7012	149/79660 138/79660	RAL 7040	149/73330 138/73330	RAL 9005	149/80350 138/80430
RAL 2004	149/20029	RAL 5009	149/47310 138/47310	RAL 7016	149/73570 138/73570	RAL 7042	149/70215 138/70215	RAL 9010	149/10017 138/10020
RAL 3001	149/30009	RAL 5011	149/41930 138/41930	RAL 7021	149/70052 138/70065	RAL 7043	149/74700 138/74700	RAL 9011	149/81930 138/81930
RAL 3002	149/30035	RAL 5012	149/41020	RAL 7022	149/70053 138/70068	RAL 7044	149/70411 138/70411	RAL 9016	149/10999 138/10999

TIGER Drylac® Series 149/138 is available in the following close approximate (Ca.) RAL metallic colors as standard products:

RAL color	Product ID	RAL color	Product ID	RAL color	Product ID	RAL color	Product ID
Ca. 1035 Pearl Beige	149/15835	Ca. 5026 Pearl Night Blue	149/40127	Ca. 8029 Pearl Copper	149/60064	Ca. 9023 Pearl Dark Grey	149/90015
Ca. 1035 Pearl Beige SD	138/15835	Ca. 5026 Pearl Night Blue SD	138/40127	Ca. 8029 Pearl Copper SD	138/60064	Ca. 9023 Pearl Dark Grey SD	138/90015



The living global TIGER network at your service.



Production facilities
Austria | Canada | China | Mexico | U.S.A. | Vietnam

Affiliated companies and distribution

Europe
Austria | Belarus | Benelux | Bosnia & Herzegovina | Bulgaria | Croatia | Czech Republic | Estonia France | Germany | Great Britain | Greece | Hungary | Italy | Latvia | Lithuania | Macedonia | Poland Romania | Serbia & Montenegro | Slovakia | Slovenia | Spain | Switzerland | Turkey | Ukraine

The Americas
Canada | Mexico | U.S.A.

Asia
China | India | Japan | Taiwan | Vietnam

www.tiger-coatings.com

TIGER WebShop

9980024008B7 / 05-24

TIGER Drylac® Powder Coatings



RAL Colors + Textured & Smooth
Based on RAL | Interior & exterior applications | Vol 3

VOL. 3

Powder coatings for exterior & interior applications

Exterior & Interior Applications
TIGER Drylac® Series 149 and **Series 138** are Polyester TGIC-Free weather resistant powder coatings. **TIGER Drylac® Series 149** is suitable for interior and exterior applications while **Series 138** is a super durable (SD) powder coating compliant to AAMA 2604* with excellent weather resistance properties for high performance architectural exterior applications (*AAMA 2604 compliance dependent upon the color and/or effect).

Standard interior applications
TIGER Drylac® Series 09 is a polyester/epoxy-based standard cure powder coating. When lower or faster cure parameters are required, **TIGER Drylac® Series 89** polyester/epoxy-based is recommended. Both **TIGER Drylac® Series 09** and **TIGER Drylac® Series 89** are ideal for applications such as electrical and electronic enclosures, store fixtures, shelving, office and school furniture, ceiling panels, cladding components, radiators, tools and equipment, toys and machinery parts. They provide very good mechanical and flow properties, excellent coverage and good storage stability.

Chemical resistance
TIGER Drylac® Series 69 is an epoxy-based powder coating with excellent chemical and corrosion resistance, very good mechanical and flow properties and good storage stability. It provides excellent coverage. It is ideal for laboratory equipment, machinery parts, pump housing as well as surfaces where increased chemical resistance is required.

Specialties
TIGER Drylac® Series 09 Electrostatic Dissipative (ESD) powder coatings allow a controlled dissipation of the static buildup or prevent the buildup of a high charge in applications such as computer hoods and electronic cabinetry. Resistivity measurements in the lab measure 10^6 to 10^9 ohms. It is possible to custom-match colors in a range from dark grey to black.

FDA-compliance
TIGER Drylac® Series 09 FDA-compliant powder coatings are in conformity with the Food and Drug Administration's raw materials requirements of 21 CFR 175.300 "Resinous and Polymeric Coatings". FDA-compliant powder coatings also "conform" and "comply" with the requirements of 21 CFR 178.3297 "Colorants for Polymers". **TIGER Drylac®** has not conducted compliance tests, but rather relies on the raw materials suppliers to provide the appropriate documentation. It is the buyer's and customer's responsibility to test applied parts carrying the mention "FDA approved", as may be required by their customers.

Textured and smooth gloss levels
Smooth flat matte gloss levels range from 0 to 15 units.
Smooth matte gloss levels range from 16 to 25 units.
Smooth semigloss gloss levels range from 55 to 65 units.
Smooth glossy gloss levels range from 80 to 95 units.
Fine and rough textured gloss levels cannot be measured and are, therefore, accorded visually.

Disclaimer
The colors featured in this color card are matched as accurately as possible to **RAL standards**. Some deviations from the RAL standards might be noticeable due to texture and/or gloss level of the surface finish. Swatches have been matched to color standards at a **45-degree visual angle under a D65 Daylight** primary source. Gloss level on fine and rough textured swatches cannot be accurately measured. The swatches are to be considered as an indication only. In practice, discrepancy between the color swatch and the actual powder coating may arise. This is due to paper and ink limitations, the influence of light and heat during the color card production, as well as gloss level, substrate, surface variations, binder systems and pigments, coating thickness and cure oven conditions used during application. For an accurate color and finish assessment, it is recommended to obtain a powder coated sample panel from **TIGER Drylac®**.

TIGER Drylac® Powder Coatings

RAL 1000 149/15200 | RAL 1001 149/15190 138/15001 | RAL 1002 149/22590 138/20002 | RAL 1003 149/22580 | RAL 1004 149/22570 | RAL 1005 149/22560

RAL 1006 149/22550 | RAL 1007 149/22540 | RAL 1011 149/15180 | RAL 1012 149/22530 | RAL 1013 149/11280 138/10013 | RAL 1014 149/15170 138/15014

RAL 1015 149/15320 138/15015 | RAL 1016 149/22520 138/20016 | RAL 1017 149/22510 | RAL 1018 149/21830 | RAL 1019 149/13660 138/15019 | RAL 1020 149/22500

RAL 1021 149/22280 | RAL 1023 149/22490 | RAL 1024 149/22480 138/20024 | RAL 1027 149/22470 | RAL 1028 149/22460 | RAL 1032 149/22450

RAL 1033 149/22240 | RAL 1034 149/23910 | RAL 1037 149/20096 | RAL 2000 149/24570 | RAL 2001 149/24560 | RAL 2002 149/24550

RAL 2003 149/24540 | RAL 2004 149/24530 | RAL 2008 149/24340 | RAL 2009 149/24360 | RAL 2010 149/24520 | RAL 2011 149/24580

RAL 2012 149/24690 | RAL 3000 149/33120 | RAL 3001 149/31120 | RAL 3002 149/31110 | RAL 3003 149/31100 | RAL 3004 149/33900

RAL 3005 149/31900 | RAL 3007 149/31910 | RAL 3009 149/31920 | RAL 3011 149/31090 | RAL 3012 149/31940 138/30012 | RAL 3013 149/31950

RAL 3014 149/31080 | RAL 3015 149/33670 | RAL 3016 149/31980 | RAL 3017 149/31060 | RAL 3018 149/31050 | RAL 3020 149/31040

RAL 3022 149/33700 | RAL 3027 149/33660 | RAL 3031 149/34730 | RAL 4001 149/43160 | RAL 4002 149/31030 | RAL 4003 149/32270

RAL 4004 149/31020 | RAL 4005 149/42780 | RAL 4006 149/32090 | RAL 4007 149/32540 | RAL 4008 149/32280 | RAL 4009 149/34740

RAL 4010 149/40490 | RAL 5000 149/42200 | RAL 5001 149/42210 | RAL 5002 149/42220 | RAL 5003 149/42230 | RAL 5004 149/42240 138/40004

RAL 5005 149/43190 | RAL 5007 149/42250 138/40007 | RAL 5008 149/42260 138/40008 | RAL 5009 149/42270 | RAL 5010 149/42280 | RAL 5011 149/43180 138/40011

RAL 5012 149/43170 | RAL 5013 149/42310 138/40013 | RAL 5014 149/42320 | RAL 5015 149/42330 | RAL 5017 149/40760 138/40017 | RAL 5018 149/41140 138/40020

RAL 5019 149/42360 138/40019 | RAL 5020 149/44270 138/40018 | RAL 5021 149/41190 138/40021 | RAL 5022 149/42390 | RAL 5023 149/44650 | RAL 5024 149/44660

RAL 6000 149/53160 138/50000 | RAL 6001 149/52900 138/50005 | RAL 6002 149/52890 | RAL 6003 149/52880 138/50003 | RAL 6004 149/50980 138/50004 | RAL 6005 149/50670 138/50002

RAL 6006 149/52870 138/50006 | RAL 6007 149/52860 138/50007 | RAL 6008 149/53240 138/50008 | RAL 6009 149/52840 138/50009 | RAL 6010 149/52830 | RAL 6011 149/52820 138/50011

RAL 6012 149/51540 138/50012 | RAL 6013 149/52810 138/50013 | RAL 6014 149/52800 | RAL 6015 149/52790 | RAL 6016 149/51020 138/50016 | RAL 6017 149/52780 138/50017

RAL 6018 149/52720 138/50018 | RAL 6019 149/51000 138/50019 | RAL 6020 149/52710 138/50020 | RAL 6021 149/52700 138/50021 | RAL 6022 149/52690 138/50022 | RAL 6024 149/52680

RAL 6025 149/52670 | RAL 6026 149/52660 138/50026 | RAL 6027 149/50990 138/50027 | RAL 6028 149/52650 138/50028 | RAL 6029 149/52640 138/50029 | RAL 6032 149/52630 138/50032

RAL 6033 149/55010 138/50033 | RAL 6034 149/55020 138/50034 | RAL 6037 149/50037 **NEW** | RAL 7000 149/72700 138/70000 | RAL 7001 149/72710 | RAL 7002 149/72720 138/70007

RAL 7003 149/72600 | RAL 7004 149/73300 138/70004 | RAL 7005 149/72590 138/70005 | RAL 7006 149/72580 138/70006 | RAL 7008 149/72570 | RAL 7009 149/72770 138/70009

RAL 7010 149/72560 138/70014 | RAL 7011 149/72790 138/70011 | RAL 7012 149/71180 138/70012 | RAL 7013 149/72550 138/70013 | RAL 7015 149/72820 138/70015 | RAL 7016 149/72830 138/70016

RAL 7021 149/72540 138/70021 | RAL 7022 149/72850 138/70022 | RAL 7023 149/72530 138/70827 | RAL 7024 149/72870 138/70024 | RAL 7026 149/72880 138/70026 | RAL 7030 149/72890 138/70027

RAL 7031 149/72520 138/70031 | RAL 7032 149/72910 138/70001 | RAL 7033 149/72510 138/70033 | RAL 7034 149/72500 | RAL 7035 149/73510 138/70035 | RAL 7036 149/72950 138/70036

RAL 7037 149/72480 138/70037 | RAL 7038 149/72470 138/70038 | RAL 7039 149/71020 138/70039 | RAL 7040 149/75470 138/70046 | RAL 7042 149/73250 138/70042 | RAL 7043 149/72460 138/70043

RAL 7044 149/75480 138/70044 | RAL 7045 149/77890 138/70045 | RAL 7046 149/72010 138/70817 | RAL 7047 149/72020 138/70047 | RAL 8000 149/66170 | RAL 8001 149/66160 138/60005

RAL 8002 149/66150 138/60002 | RAL 8003 149/66140 | RAL 8004 149/66130 138/60004 | RAL 8007 149/66120 138/60007 | RAL 8008 149/66110 138/60008 | RAL 8011 149/66100 138/60011

RAL 8012 149/66090 138/60012 | RAL 8014 149/65230 138/60010 | RAL 8015 149/63040 | RAL 8016 149/66080 138/60016 | RAL 8017 149/65220 138/60017 | RAL 8019 149/65490 138/60019

RAL 8022 149/63080 138/60022 | RAL 8023 149/66070 | RAL 8024 149/66060 138/60024 | RAL 8025 149/66050 138/60025 | RAL 8028 149/66500 138/60028 | RAL 9001 149/10016 138/10001

RAL 9002 149/70520 138/10002 | RAL 9003 149/11400 138/10003 | RAL 9004 149/81950 138/80004 | RAL 9005 149/82830 138/80010 | RAL 9010 149/11500 138/10004 | RAL 9011 149/80540 138/80001

RAL 9016 149/11340 138/10010 | RAL 9017 149/80550 138/80017 | RAL 9018 149/72490 138/10018

TIGER

ONLINE VERSION: The colors/effects shown here will deviate from the original color/effect due to screen technology.

Textured and Smooth Finishes

rough texture matte | rough texture glossy | fine texture | smooth matte | smooth semigloss

The chart below lists all the RAL colors available in interior Textured and Smooth Finishes

approx RAL color	rough texture matte	rough texture glossy	fine texture	smooth matte	smooth semi-gloss
RAL 1013	09/10030	89/10020	89/10990	09/10870	-
RAL 1015	-	-	-	09/15380	-
RAL 1021	-	89/20120	-	-	-
RAL 3002	-	89/30560	89/30450	-	-
RAL 5003	-	-	89/41040	-	-
RAL 5010	09/41000	89/40480	89/41060	-	-
RAL 5012	-	89/40940	89/41070	-	-
RAL 5015	-	89/41110	-	-	-
RAL 7001	-	89/71320	89/71460	-	-
RAL 7012	09/71410	-	89/71470	-	89/71200
RAL 7016	09/71420	-	89/71480	-	89/71260
RAL 7021	09/70110	-	89/71490	09/71190	-
RAL 7030	-	-	89/71500	-	-
RAL 7032	-	-	89/71520	-	-
RAL 7035	09/70230	89/70220	89/71530	09/71230	89/71300
RAL 7038	-	89/71380	89/71540	-	-
RAL 7040	-	89/70640	89/70630	-	89/76930
RAL 7044	-	89/70690	89/70680	-	-
RAL 8019	-	-	89/60850	-	-
RAL 9001	09/10060	-	89/11000	-	-
RAL 9002	09/10090	-	89/11010	09/10890	-
RAL 9003	09/10980	89/10960	89/11020	09/10900	89/10950
RAL 9005	09/80440	39/81420	09/80160	09/80130	89/80400
RAL 9010	09/10130	-	89/11030	09/10120	89/10110
RAL 9011	09/80450	-	89/80410	-	-
RAL 9016	-	89/10430	89/10420*	09/13120	89/13130

*aprx to RAL 9016

FDA-compliant | epoxy | electrostatic dissipative

FDA-compliant
Black FDA - 09/80108
gloss level 90-110

FDA-compliant
Grey FDA - 09/70339
gloss level 80-95

FDA-compliant
White FDA - 09/10126
gloss level 90-110

epoxy
Black - 89/80291
gloss level 2-5

electrostatic dissipative
Black Conductive - 09/81760
gloss level 16-25