PD10R and PD100FR-CU Pad-Style Snow Guard
Submittal Document Set

ROOF TYPES

- Existing Slate
- Existing Synthetic Shake or Slate
  (For synthetic materials < = 3/8” thickness)

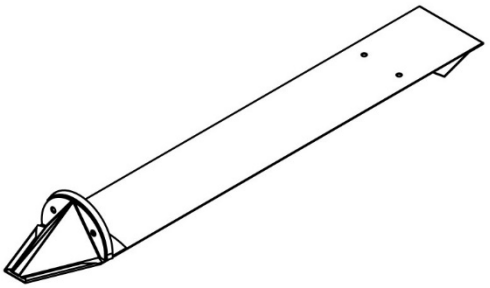

AVAILABLE MATERIALS

- Aluminum (AL)
- Copper (CU)
- Freedom Gray™ (FG)
- Lead-Coated Copper (LC)
- Rheinzink® (ZN)



AVAILABLE FINISHES

- Pre-Painted Kynar® Stock Colors

FEATURES/ADVANTAGES

- Fits slate 16” – 20” in length
- Pad area is 2 3/8" L x 2 3/8" W (at widest point) x 1 7/16" H
- Standard strap length is 13 3/8" (custom lengths available)
- Standard hook height is 1 ¼” (custom heights available)
- Our riveted "fish head" design means optimum strength with no risk of unfolding
- Thin, yet durable strap minimizes disruption of slate/shingle pattern while allowing secure mechanical attachment to structural deck
- Ease of installation with a "slate rip" or similar tool; slide under upper lying course of shingles and pull down to engage tab. No need for nail hangers.
- Allows snow and ice to drop off in small amounts or melt completely
- Protects against snow damage at the lower roof level (gutters, valleys, crickets, roof protrusions, plumbing vents, etc) and at ground level (cars, people, landscaping, pets, walkways, ground-mounted mechanical units)
- Also available with Fleur-de-lis embellishment (SKU: PD100F-CU, Copper only)

Cut Sheet - PD10R

1. Installation to be completed in accordance with manufacturer's written specifications and installation instructions.
2. See spec sheet or contact manufacturer for detailed material, finishes, and configuration options.
3. Contact manufacturer for detailed layout.
4. Do not scale drawings.
5. Subject to change without notice.
6. For patent information, visit our Patent Page.

Available Materials

- ☐ Aluminum
- ☐ Copper
- ☐ Freedom Gray™
- ☐ Lead-Coated Copper
- ☐ Rheinzink®

*Some materials may have a 3rd button connecting cap and gusset to strap

Available Finishes

- ☐ Mill Finish (Standard)
- ☐ Pre-Painted Aluminum
  (Firestone UnaClad Kynar Color:_____)
- ☐ Powder Coated
  (Tiger Drylac RAL#_____)

☐ **STANDARD SIZE** (Will fit slate from 16" to 20" long):

Strap Length (L) = 13 3/8" Hook Length (T) = 1 1/4"

☐ **CUSTOM SIZE:**

Strap Length (L) =_____ Hook Length (T) =_____

Signature: _____ Date: _____

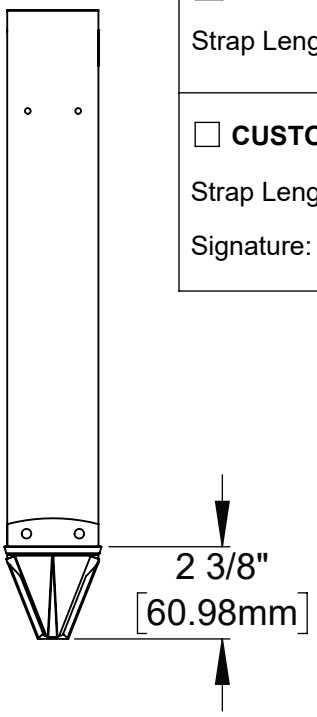

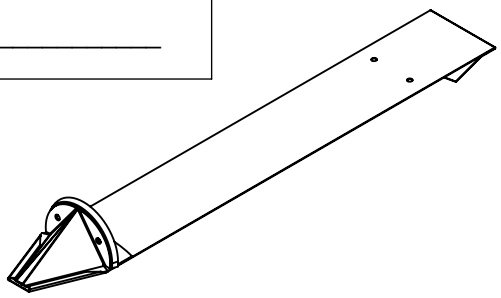

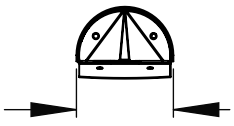

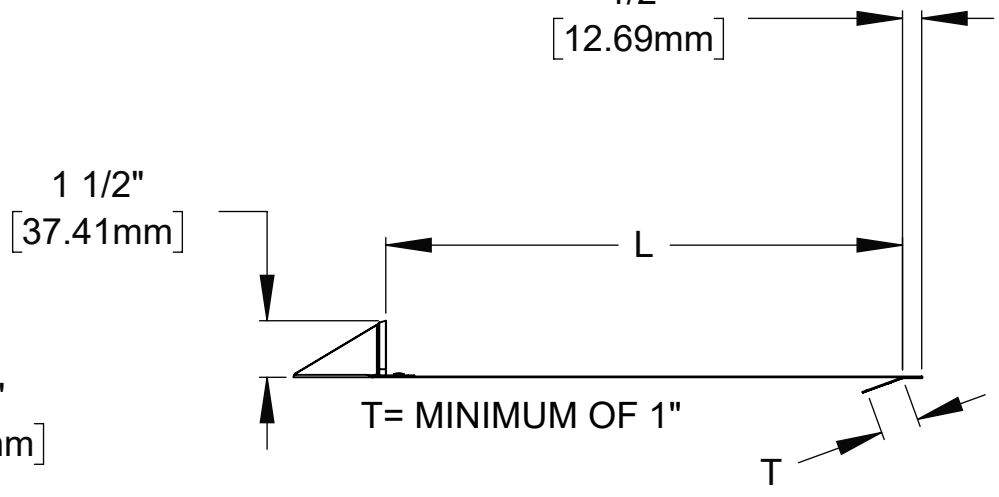

ALPINE SNOWGUARDS®

289 Harrel Street
Morrisville, VT 05661
Phone: 1.888.766.4273
Fax: 1.888.766.9994
Email: Info@alpinesnowguards.com

Scale: 1:5 | 4/14/2023

Cut Sheet - PD10R-LONG

1. Installation to be completed in accordance with manufacturer's written specifications and installation instructions.
2. See spec sheet or contact manufacturer for detailed material, finishes, and configuration options.
3. Contact manufacturer for detailed layout.
4. Do not scale drawings.
5. Subject to change without notice.
6. Aluminum half-round pad-style snow guards will have a third button connecting pad to the strap.
7. For patent information, visit our Patent Page.

Available Materials

- ☐ Aluminum
- ☐ Copper
- ☐ Freedom Gray™
- ☐ Lead-Coated Copper
- ☐ Rheinzink®

Available Finishes

- ☐ Mill Finish (Standard)
- ☐ Pre-Painted Aluminum
  (Firestone UnaClad Kynar Color:_____)
- ☐ Powder Coated
  (Tiger Drylac RAL#_____)

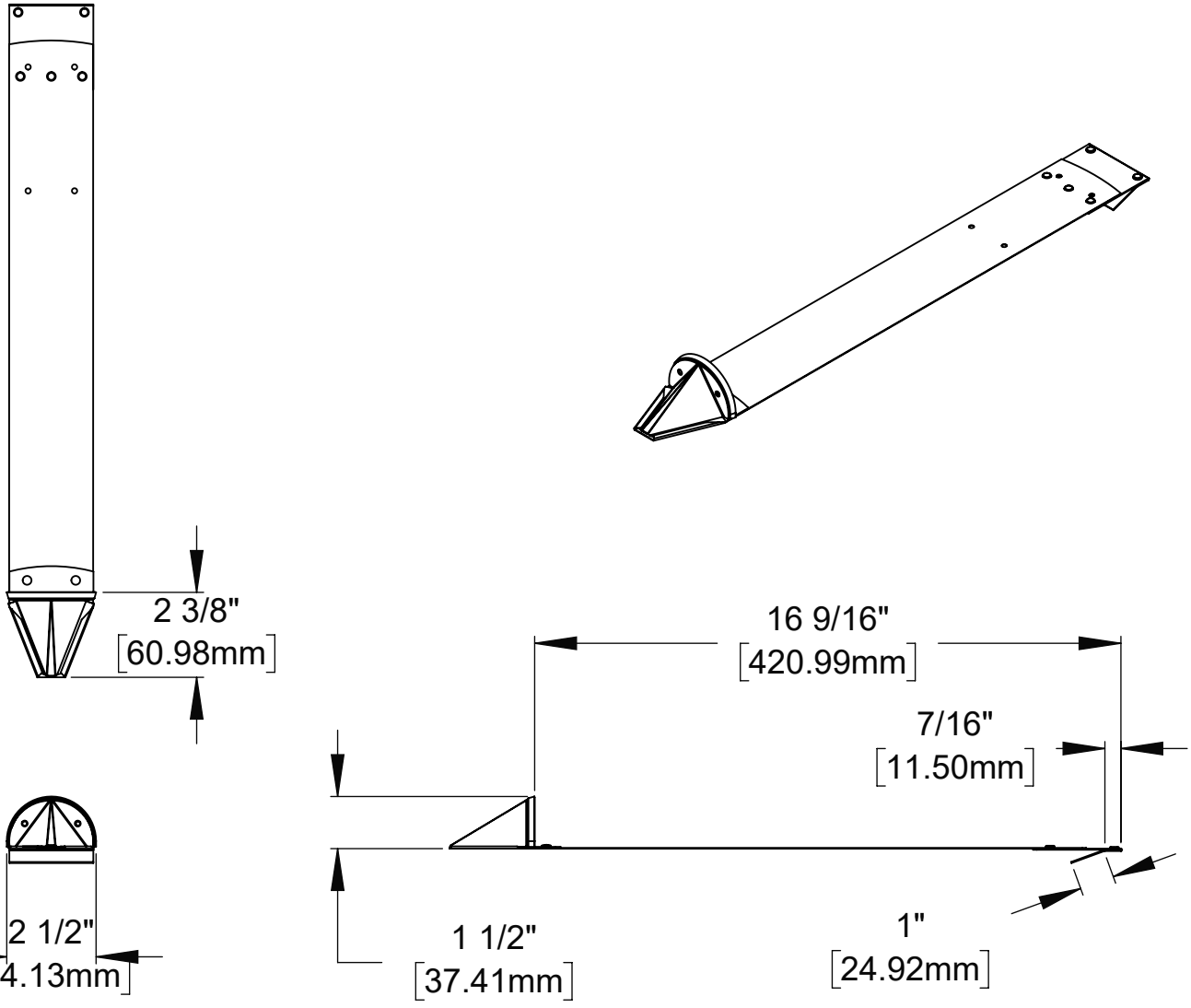

ALPINE SNOWGUARDS®

289 Harrel Street
Morrisville, VT 05661
Phone: 1.888.766.4273
Fax: 1.888.766.9994
Email: Info@alpinesnowguards.com

Scale: 1:5 | 8/15/2022

Cut Sheet - PD100FR-CU

1. Installation to be completed in accordance with manufacturer's written specifications and installation instructions.
2. See spec sheet or contact manufacturer for detailed material, finishes, and configuration options.
3. Contact manufacturer for detailed layout.
4. Do not scale drawings.
5. Subject to change without notice.
6. For patent information, visit our Patent Page.

☐ **STANDARD SIZE** (Will fit slate from 16" to 20" long):

Strap Length (L) = 13 3/8" Hook Length (T) = 1 1/4"

☐ **CUSTOM SIZE:**

Strap Length (L) =_____ Hook Length (T) =_____

Signature: _____ Date: _____

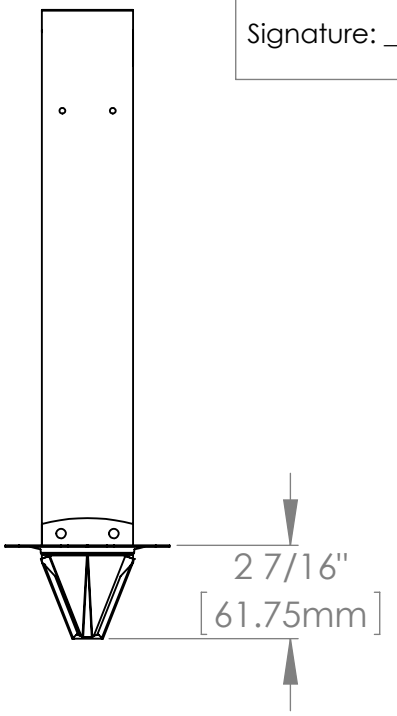

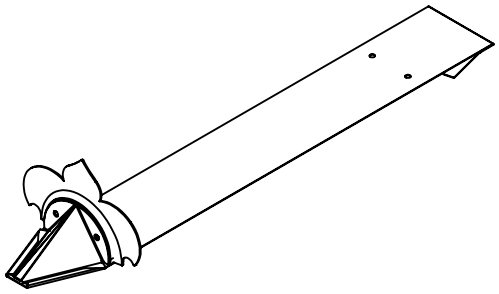

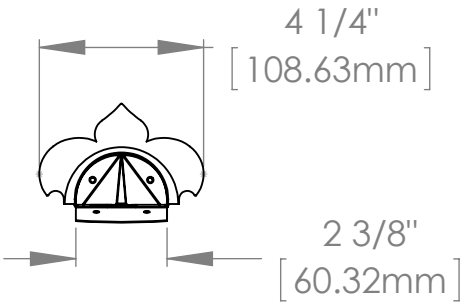

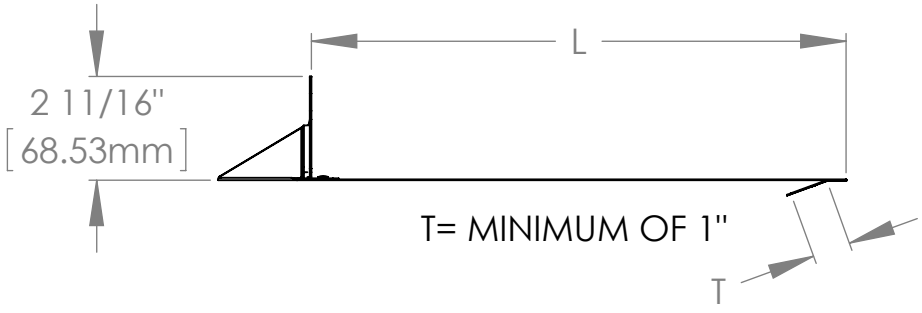

ALPINE SNOWGUARDS®

289 Harrel Street
Morrisville, VT 05661
Phone: 1.888.766.4273
Fax: 1.888.766.9994
Email: Info@alpinesnowguards.com

Scale: 1:5 | 10/27/2020

PD10R and PD100FR-CU Specification Sheet
Snow Guards

Part 1 – GENERAL

1.1 SUMMARY

A. WORK INCLUDES

1. PD10R and PD100FR-CU gusseted snow guard that hooks over shingle.
2. Coordinate with roof installation to assure proper placement of snow guards.

B. RELATED SECTIONS

1. Section 076000: Flashing and Sheet Metal	MasterFormat 2016 07 60 00
2. Section 073100: Shingles and Shakes	MasterFormat 2016 07 31 00
3. Section 073200: Roof Tiles	MasterFormat 2016 07 32 00
4. Section 077253: Snow Guards	MasterFormat 2016 07 72 53

1.2 SYSTEM DESCRIPTION

A. COMPONENTS

1. PD10R and PD100FR-CU snow guard system consists of individual metal snow guards.

1.3 SUBMITTAL

A. Submit manufacturer's specifications, standard detail drawings, installation instructions, and recommended layout.

1.4 QUALITY ASSURANCE

A. Installer to be experienced in installation of specified roofing material and snow guards for not less than 5 years in the area of the project.

1.5. DELIVERY / STORAGE / HANDLING

A. Inspect material upon delivery and order replacements for any missing or defective items. Keep material dry, covered and off the ground until installed.

PD10R and PD100FR-CU Specification Sheet
Snow Guards

Part 2 – PRODUCTS

2.1 MANUFACTURER

A. Alpine SnowGuards®, a Division of Vermont Slate & Copper Services, Inc.
289 Harrel St., Morrisville, VT 05661 | 888-766-4273 | www.alpinesnowguards.com

2.2 MATERIALS

A. Copper – Strap, cap and gusset are 16 oz copper. Fleur-de-lis embellishment is *only* available in copper and has a minimum material thickness of .040.
B. Lead-Coated Copper – 16 oz lead-coated copper.
C. Aluminum – .032 aluminum.
D. Freedom Gray™ – 16 oz tin-zinc coated copper.
E. Rheinzink® – .8mm Rheinzink®.

2.3 FINISH (choose one)

A. Mill Finish – standard.
B. Powder Coated – available at additional cost.
(Not available for PD100FR-CU)
C. Kynar 500® pre-painted coil – aluminum only.
(Not available for PD100FR-CU)

Part 3 – EXECUTION

3.1 EXAMINATION

A. SUBSTRATE

1. Inspect structure on which snow guard system is to be installed and verify that it will withstand any additional loading it may incur. Notify general contractor of any deficiencies before installing Alpine SnowGuards' products.
2. Verify roofing material has been installed correctly prior to installing snow guards.

3.2 INSTALLATION

A. Comply with architectural drawings and snow guard manufacturer's recommendations for location of system. Comply with manufacturer's written installation instructions for installation and layout.

Document Version 04.26.2023
07 72 53 Snow Guards

PD10R and PD100FR-CU Snow Guard Installation Instructions

ROOF TYPES

- Existing Slate (shown)
- Existing Synthetic Shake or Slate (For synthetic materials < = 3/8" thickness)

PRE-INSTALLATION

The standard size for the PD10R strap is 13 3/8" (L), with a 1 ¼" hook (T).

- This will fit slate / shake / synthetic slate & shakes from 16"-20" long.
- Overall length for standard PD10R is 16 3/8".

To determine appropriate strap length (L), add amount of hidden slate to 3x the thickness of the slate.

The minimum hook length (T) is 1".

- For thicker slates, the hook may need to be longer than the thickness of the slate (*fig. 1*).

Custom snow guards are available. Contact Alpine SnowGuards 888.766.4273 with any questions.

INSTALLATION

1. Hook snow guard over end of a slater's rip or similar tool (*fig. 2*).

2. Using slater's rip, slide snow guard between the 3rd and 4th courses so the hook engages top edge of slate (*fig. 3*).

3. Pull the rip out and pull snow guard down into place so that it engages top of the slate.

Note: *It may be necessary to repeat above steps if snow guard does not "hook".*

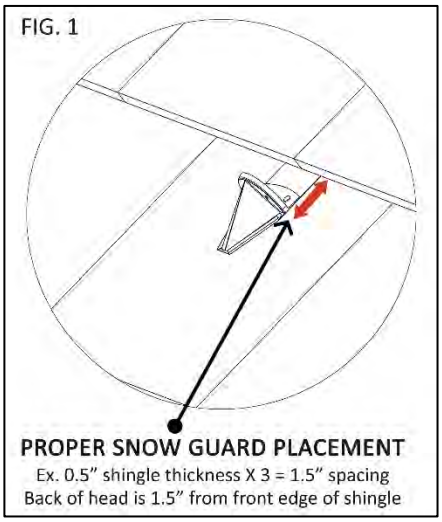

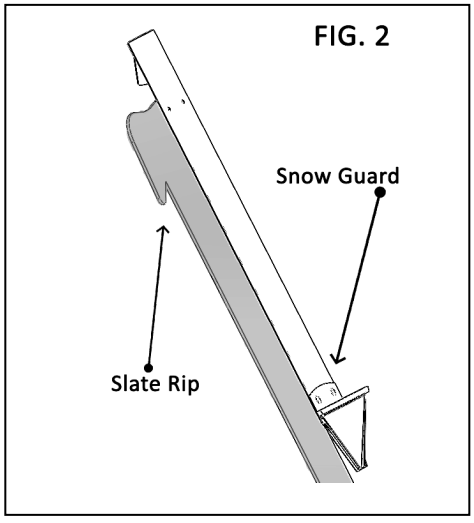

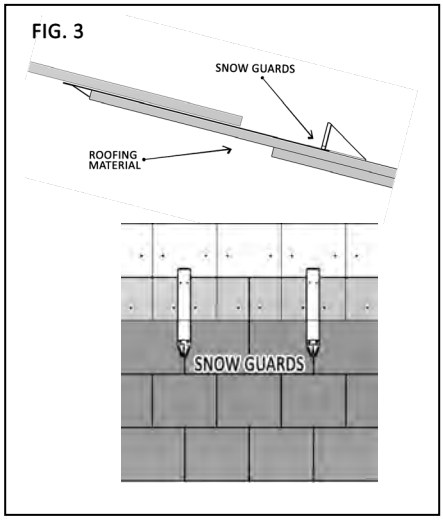

PD10R and PD100FR-CU Snow Guard Installation Instructions

STANDARD SNOW GUARD LAYOUT OPTIONS

IMPORTANT: All layouts begin with a 3-row pattern. Estimated quantities provided include 3-row pattern. If you have any questions, please contact us at 888-766-4273.

Please use the guidelines below to determine the appropriate layout for your installation.

PAD LAYOUT GUIDELINES					
Layout	Rafter Length	Ground Snow Load (PSF)	Roof Pitch	Est. Snow Guard QTY.	Spacing
3-Row Pattern	15' or Less	60 psf or Less	16/12 or Less	17 per 10' of Eave	3 rows, 24" on center horizontally with middle row staggered 12"
2 x 4 Pattern	Greater Than 15'	60 psf or Less	16/12 or Less	12 per roofing square	Space rows 2' vertically and 4' horizontally to within 10' of the ridge.
2 x 3 Pattern	Any	61 - 90 psf	16/12 or Less	18 per roofing square	Space rows 2' vertically and 3' horizontally to within 10' of the ridge.
2 x 2 Pattern	Any	91 - 120 psf	16/12 or Less	24 per roofing square	Space rows 2' vertically and 2' horizontally to within 10' of the ridge.

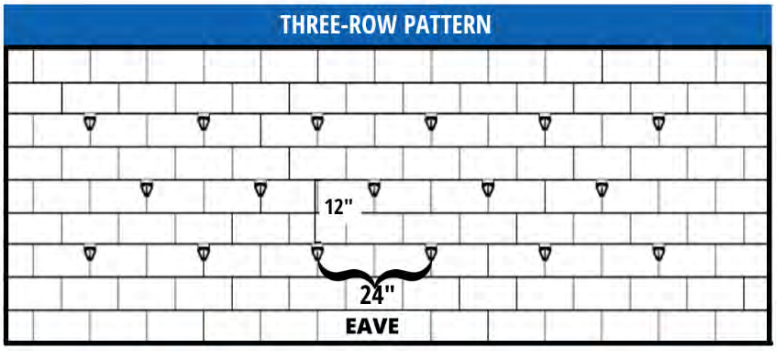

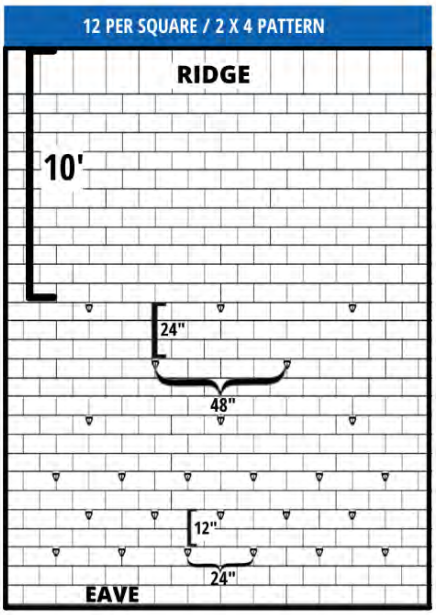

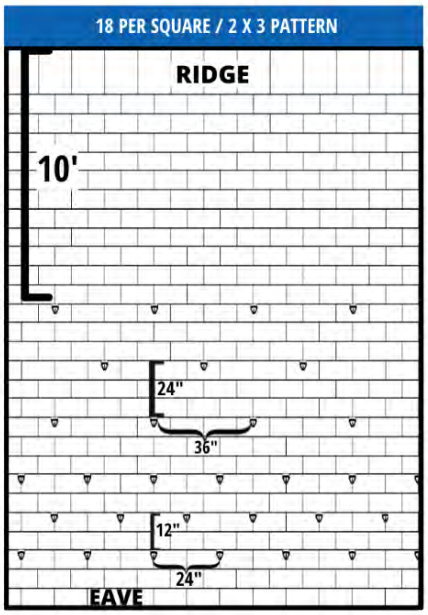

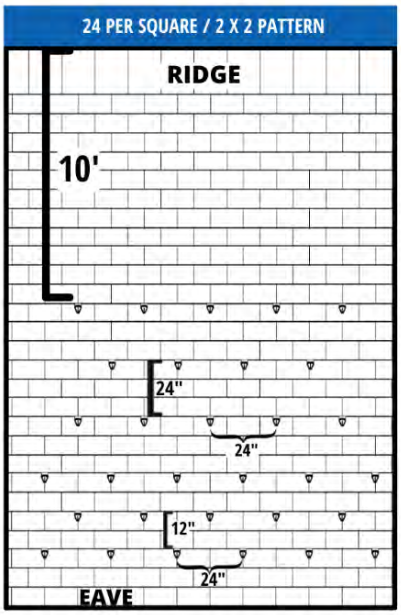

Document Version 3.14.2023
07 72 53 Snow Guards

Snow Guard Maintenance

Our snow guards must be inspected annually. Any defects or damage in materials and/or workmanship must be reported to Alpine SnowGuards immediately. Seller will not be responsible for snow guard systems that have not been properly maintained.

- Ensure snow guard brackets, accessories & components are intact, have not been displaced, and show no signs of damage or wear.
- Inspect fasteners into roof deck.
- Inspect snow guard-related waterproofing and replace or repair where necessary to ensure roof integrity.
- Snow accumulation on roofs and rooftop solar panels must be removed to avoid damage to the roof or panels, the building structure, and anything below. Heavy snowfalls, drifting, and the gradual accumulation of snow and ice can lead to less-than-ideal snow guard performance.
- Check each clamp set screw with a torque wrench to ensure proper fastening has been maintained (clamp-to-seam models).
- Inspect sealant, tape, and adhesive. Remove and replace as needed.

Alpine SnowGuards®, a Division of Vermont Slate & Copper Services, Inc.
289 Harrel St., Morrisville, VT 05661 | 888-766-4273 | info@alpinesnowguards.com | www.alpinesnowguards.com

UNA-CLAD™ METAL - Pre-Painted Kynar® Stock Colors

For Half-Round Pad Style Snow Guards and SnowMax Color Insert Strips

Double-Sided Stock Colors

Colonial Red (51)

Classic Copper (75)

Charcoal Gray (05)

Slate Gray (03)

Matte Black (69)

Medium Bronze (66)

Mansard Brown (81)

Dark Bronze (57)

Hartford Green (33)

Single-Sided Stock Colors

Terra Cotta (54)

Patina Green (39)

Teal (21)

Brandywine (45)





Other Pad Style Material Options:

Aluminum (AL) Copper (CU) Freedom Gray™ (FG) Lead-Coated Copper (LC) Rheinzink® (ZN)

Mill Finish aluminum pad-style snow guards can also be powder coated with **RAL TIGER Drylac® Exterior Powder Coatings** for an additional charge.